ELECTION RULES OF THE COLORADO SECRETARY OF STATE

TABLE OF CONTENTS

Rule		Page
Rule 1.	Definitions	3
Rule 2.	Rules Concerning Voter Registration	3
Rule 3.	Rules Concerning Qualified Political Organizations	5
Rule 4.	Rules Concerning Circulation of Candidate Petitions	7
Rule 5.	Rules Concerning Non-Partisan Elections Not Coordinated by the County Clerk	7
Rule 6.	Rules Concerning Coordinated Elections	9
Rule 7.	Rules Concerning Polling Places	15
Rule 8.	Rules Concerning Watchers	16
Rule 9.	Rules Concerning Assistance to Disabled Voters	19
Rule 10.	Rules Concerning Ballots and Election Supplies	20
Rule 11.	Rules Concerning Voting Systems	21
Rule 12.	Rules Concerning Mail Ballot Elections	33
Rule 13.	Rules Concerning Mail-in Voting	40
Rule 14.	Rules Concerning Recount	42
Rule 15.	Rules Concerning Preparation Filing, and Verification of Statewide Initiative Petitions	45
Rule 16.	Rules Concerning Verification by Random Sample of Statewide Initiative Petitions - Repealed	47
Rule 17.	General Rules Concerning Verification of Petitions	47
Rule 18.	Rules Concerning Statement of Sufficiency for Petitions	49
Rule 19.	Rules Concerning Cure for Statewide Petitions	50
Rule 20.	Rules Concerning Protests	50
Rule 21.	Rules Concerning Ballot Issue Elections	51
Rule 22.	Rules Concerning Checking Candidate and Issue Petitions – Repealed	51
Rule 23.	Rules Concerning Referendum Petitions. Sections 1-40-132 and 1-1-107(2)(a), C.R.S.	51
Rule 24.	Rules concerning Congressional Term Limits Declaration	53

Rule 25. Rules Concerning Uniformed and Overseas Citizens' Absentee Voting Act ("UOCAVA") 53

Rule 26. Rules Concerning Provisional Voting 57

Rule 27. Rules Concerning Uniform Ballot Counting Standards 62

Rule 28. Rules Concerning Election Judges..... 65

Rule 29. Rules Concerning Procedures for the Verification of Signatures 66

Rule 30. Rules Concerning Voter Identification 67

Rule 31. Rules Concerning Help America Vote Act, Title III: Administrative Complaint Procedures 72

Rule 32. Rules Concerning Recall 74

Rule 33. Rules Concerning Voters Who Vote After the Polls Close Pursuant to a Court Order 74

Rule 34. Rules Concerning the Adoption of Accessible Voting Systems under The Help America Vote Act of 2002. 75

Rule 35. Rules Concerning Requirements for Voting System Accessibility 75

Rule 36. Rules Concerning Notice of Voting System Malfunction Required; Submission of Explanatory Report by Vendor Required Upon Request of Secretary of State 78

Rule 37. The Acquisition, Purchase or Lease of Voting Systems..... 78

Rule 38. Minimum Security Procedures for Transmission of Election Records by Secure, Dedicated Teleprocessing Lines Employed by Vote Centers. See section 1-5-102.7, C.R.S. 81

Rule 39. Cancellation of Felons' Voter Registrations 86

Rule 40. Rules Concerning Certification and Education of Designated Election Officials..... 87

Rule 41. Rules Concerning Canvassing 90

Rule 42. Rules Concerning Use of Facsimile for Administrative or Medical Emergency Outside of the UOCAVA Context..... 93

Rule 43. County Security Procedures..... 96

Rule 44. Rules Regulating Voter Registration Drives 109

Rule 45. Rules Concerning Voting System Standards for Certification 113

Rule 46. Rules Concerning Vacancies in Nomination – Repealed..... 162

Rule 47. Rules Concerning Fleeing Voters..... 162

COLORADO SECRETARY OF STATE

8 CCR 1505-1

ELECTION RULES

Rule 1. Definitions

1.1 As used in these Rules and the "Uniform Election Code of 1992" unless the context otherwise requires, the following terms shall have the meanings indicated:

"District office of state concern" means any of the following offices: Member of the State Board of Education, Member of the Board of Regents of the University of Colorado, and Member of the Board of Directors of the Regional Transportation District.

Rule 2. Rules Concerning Voter Registration

2.1 All requests for lists, printouts, disks, tapes, and other media shall be made in writing.

2.2 After a receipt of request, the fee for providing the information shall be determined. The fee must be paid prior to the request being filled.

2.3 Emergency Registration Application. Prior to the implementation of the statewide voter registration database, when an elector completes an emergency registration application pursuant to section 1-2-217.5 (1)(b), C.R.S., the elector shall be required to present one of the forms of identification set forth in Rule 30.1.6.

2.4 Confidentiality of Agency in Voter Registration. For Voter Registration Applications completed pursuant to Part 5 of Article 2 of Title 1, C.R.S., at an agency designated by the National Voter Registration Act of 1993, no information regarding the name and location of the designated voter registration agency shall be provided to the public, and such information shall remain confidential.

2.5 Confidentiality of Voter Information. Pursuant to section 24-72-204(3.5)(b)(II) and (IV), C.R.S., the county clerk and recorder of the county where the individual resides shall provide an opportunity to make the request of confidentiality in person at the time such individual registers to vote or make any change in the individual's registration, and at any other time during the normal business hours of the office of the county clerk and recorder.

2.5.1 The voter's name, address, and birth date shall be listed on the confidentiality application. A confidentiality affirmation shall be printed on the form, in the area immediately above a line for the applicant's signature and the date. The affirmation shall state the following:

> *"I swear or affirm, under penalty of perjury, that I have reason to believe that I or a member of my household will be exposed to criminal harassment, or otherwise be in danger of bodily harm, if my address is not kept confidential"*

2.5.2 Immediately below the signature line, there shall be a printed notice, in a type that is larger than the other information contained on the form, that the applicant may be prosecuted for perjury in the second degree under section 18-8-503, C.R.S., if the applicant signs such affirmation and does not believe such affirmation to be true.

2.5.3 A voter making an address change within the same county shall not be charged an additional processing fee.

2.6 Information required from applicants for voter registration.

2.6.1 All applicants for voter registration shall provide on the application for voter registration:

(1) in the case of an applicant who has been issued a current and valid Colorado driver's license or valid Identification card issued by the department of revenue, the applicant's driver's license number or Identification card number; or

(2) in the case of an applicant who has not been issued a current and valid Colorado driver's license or valid Identification card issued by the department of revenue, the last four digits of the applicant's social security number or the entire social security number.

2.6.2 If an applicant has not been issued a current valid Colorado driver's license number, a valid Identification card issued by the department of revenue, or a social security number as required by Rule 2.6.1, the applicant shall be assigned a unique identifying number for voter registration purposes.

2.6.3 Pursuant to section 1-2-509, C.R.S., a county clerk shall treat an application as "incomplete" if an applicant for voter registration provides a social security number or a portion of a social security number, but does not provide a driver's license number or identification card number and fails to indicate whether they have a driver's license or identification card number. The county clerk shall notify the applicant that the application is not complete and state the additional information required to complete registration. A county clerk may place such application in an "incomplete" file within the voter registration system, but the applicant shall not be considered registered unless such information is provided. The applicant shall be deemed registered as of the date of application if the additional information is provided at any time prior to the actual voting. [1-2-204(2)(f.5) and (3)(c)]

2.7 First Time Voter Who Registers by Mail.

2.7.1 Prior to the implementation of the statewide voter registration database, when a first time voter registers to vote by mail, the voter shall provide a copy of one of the forms of identification set forth in Rule 30.1.6.

2.7.2 If an applicant fails to check the box(es) answering the question(s), "Are you a citizen of the United States?" or "Will you be 18 years of age on or before election day?", the form shall be accepted for registration so long as it is otherwise complete and the affirmation at the bottom of the form is signed.

2.8 Submission of voter registration forms. A properly executed voter registration form may be submitted to the county clerk and recorder in person, by mail, by fax, or as a PDF attachment to an email.

2.8.1 All voter registrations submitted by mail, fax, or as a PDF attachment to an email shall be treated as mail registrations. [Section 1-2-501, C.R.S., Election Rule 30.3]

2.8.2 If any portion of a voter registration submitted by "mail" is illegible, the county clerk and recorder shall notify the applicant of the additional information required in accordance with section 1-2-509, C.R.S.

2.9 Registration of Homeless Voters.

2.9.1 For the purpose of voter registration residence a homeless voter may identify a specific location within a precinct that the voter considers his home base to which the voter returns regularly and manifests an intent to remain, and a place from which he or she can receive messages and be contacted. A home base may include a homeless shelter, a homeless provider, a park, a campground, a vacant lot, a business address, or any other physical location.

2.9.2 If the home base does not include a mailing address, then the homeless voter must provide a mailing address pursuant to section 1-2-204(2)(f), C.R.S.

2.9.3 A post office box or general delivery at a post office shall not be deemed a home base.

2.10 Changes to an Elector's Voter Registration Record. If an elector submits a change to his or her voter registration record that does not contain all of the information required by sections 1-2-216 or 1-2-219, C.R.S., the county clerk and recorder may not make the requested change, unless the county clerk and recorder can confidently identify the voter, otherwise the county clerk and recorder shall notify the voter what additional information is required to process the request.

2.11 For the purposes of section 1-2-605(4)(a), C.R.S., an update to a voter's registration information to change the voter's status from inactive to active must be provided to the county clerk and recorder by any of the following ways:

a. A signed written request, delivered in person or by U.S. mail, fax, or PDF attachment to an email; or

b. Oral request in person when voter presents identification.

2.11.1 In the case of the applicant's inability to sign, the elector's mark shall be witnessed by another person.

Rule 3. Rules Concerning Qualified Political Organizations

3.0 Qualified Political Organization as identified by order of the 10th Circuit Court of Appeals (Baer v. Meyer, 728 F2d 471, 10th Cir. 1984).

3.1 A qualified political organization is one which has placed a candidate for a congressional district or state office on the ballot at a congressional vacancy or general election and whose officers have filed the required proof of organization with the Secretary of State and continues to meet the requirements of 3.3 and 3.4.

3.2 The required proof of organization, which may be filed at any time after organization, shall include, but shall not be limited to:

a. By-laws of the Colorado political organization which shall include the method for selecting officers, selecting delegates to county, state, and national conventions, and selecting candidates planning to petition onto the state's general election ballot using the name of the Colorado political organization;

b. The names, addresses, and telephone numbers of the elected Colorado chairperson, vice chairperson, and secretary, together with the names, addresses, and telephone numbers of all other members elected or appointed to other offices or committees authorized by the by-laws.

3.3 Qualified political organizations shall meet once a year.

3.3.1 The meeting in the odd-numbered year shall be held for the purpose of electing a chairperson, vice-chairperson, secretary and other officers or committees as shall be provided for in the by-laws on file with the Secretary of State.

(a) For new political organizations, this meeting must take place prior to placing a candidate on the ballot. Therefore, this meeting may occur in an even-numbered year.

3.3.2 The chairperson and the secretary shall file a full and complete list, under oath, of the persons elected or appointed pursuant to Rule 3.2, together with any amendments to the by-laws adopted at the meeting.

3.3.3 The meeting in the even-numbered year shall be held for the purpose of selecting candidates who wish to use the name of the political organization on petitions for the next general election.

(a) A political organization which has not yet been qualified may select its candidate at the same meeting where the officers of the organization are named.

3.4 A qualified political organization shall place a candidate or candidates on the general election ballot every two years.

3.4.1 Candidates wishing to represent a qualified political organization on the general election ballot shall be placed in nomination by nominating petition pursuant to section 1-4-802, C.R.S.

3.4.2 Each petition shall contain the name of one candidate and shall have attached an affidavit signed under oath by the chairperson and secretary of the qualified political organization. The affidavit form shall be approved by the Secretary of State and will include the date of the meetings required in Rule 3.3.

3.4.3 For a candidate to qualify for the ballot, the candidate must have been affiliated with the qualified political organization for one year, or if the political organization has not previously been qualified, the candidate must have been registered as unaffiliated for one year.

3.4.4 Having the name of a candidate from the qualified political organization appear on the ballot by the use of the write-in candidacy process shall not be considered as, nor meeting the requirements of, placing a qualified candidate on the general election ballot.

3.5 A political organization shall be qualified as soon as it:

(a) Files proof of organization with the Secretary of State;

(b) Meets to name a candidate to the general election ballot; and

(c) Certifies a candidate to the general election ballot.

3.6 Once a political organization becomes a qualified political organization, eligible electors shall be able to register as affiliated with the political organization.

3.6.1 When an individual appears at any office or location for the purpose of voter registration, the questions asked and the information recorded shall be amended to

reflect “political organization” affiliation.

3.6.2 The opportunity to declare or change a political affiliation shall be provided exactly as the law provides for political parties in sections 1-2-204(2)(j) and. 1-2-219, C.R.S.

3.6.3 At any time a declaration or change in affiliation is requested, the same procedure shall be used for declaring a political party or political organization affiliation.

3.6.4 In recording the information on the voter registration page, or affidavit, the affiliation with a political organization shall be listed by the name entry of the organization.

3.6.5 In converting information on the voter registration page to lists, submissions for data entry, the Secretary of State’s master voter registration list, etc., standard abbreviations shall be used and will be furnished to the county clerk and recorders by the Secretary of State.

3.7 Political organizations shall lose their status as qualified political organizations by failing to do any one of the following:

(a) Meet in odd-numbered years and file their list of officers with the Secretary of State, unless excused under Rule 3.3.1(a);

(b) Meet in even-numbered years and select a candidate or candidates who wish to appear on the ballot at the next general election;

(c) Place a candidate on a general election ballot through a nominating petition, meeting the requirements of Rule 3.4.

3.8 The Secretary of State will notify the county clerk and recorders by June 1 of each odd-numbered year of the loss of qualified status of a political organization. Upon receiving notification, the county clerk and recorders shall mark on every affected voter registration record “unaffiliated.”

3.9 Print-outs, lists, tapes, etc. of voter registration records shall be furnished to qualified political organizations at the same rate or cost as charged to political parties. The only exception to this provision shall be the list furnished to the major political parties prior to the statutory precinct caucus day.

3.10 On all summary reports of voter registration by political party, the report shall list those registered with major political parties, minor political parties, qualified political organizations, or as unaffiliated.

3.11 Electors, whose voter registration record shows affiliation with a qualified political organization and who appear to vote at a primary election, shall complete a Declaration of Party Affiliation, thus losing affiliation with the qualified political organization.

Rule 4. Rules Concerning Circulation of Candidate Petitions

4.1 No petition for candidacy for any non-partisan office shall be circulated prior to 90 days before the election, except as provided in section 1-4-805, C.R.S.

Rule 5. Rules Concerning Non-Partisan Elections Not Coordinated by the County Clerk

5.1 For elections conducted on days other than described in section 1-7-116 (1), C.R.S., nothing shall preclude the designated election official from mailing the notice required by Article X, Section 20 of the Colorado Constitution to persons who are not eligible electors, if such mailing is done at the "least cost" possible.

5.2 If there are no appropriate polling place locations within the political subdivision conducting the election, a polling place may be designated outside of the political subdivision in a location that is convenient for the eligible electors of such political subdivision.

5.3 For elections not conducted in November and not coordinated with the county clerk and recorder, the ballot issue or question shall be identified by the name of the jurisdiction submitting the ballot issue or ballot question followed by a number in the case of initiatives or by a letter in the case of referred measures.

5.4 Elections authorized under Part 1, Article 45 of Title 37, C.R.S. (Water Conservancy Act), shall be conducted in accordance with Articles 1 through 13 of Title 1, C.R.S., where applicable, unless otherwise ordered by the district court having jurisdiction over the water conservancy district, pursuant to section 37-45-103 (3), C.R.S. ("Court").

5.4.1 The form and verification of any petition requesting an election conducted by a water conservancy district pursuant to sections 37-45-114 (2) and 37-45-136(3.5), C.R.S., ("Petition"), shall conform with the requirements of sections 1-40-113 and 1-40-116, C.R.S., and the sections cited therein, and Rule 17 of these rules; except that no prior approval of the form of such election petition needs to be provided by the Secretary of State, the petition shall be filed with the Court and the verification process shall be directed by the water conservancy district named in the petition rather than the Secretary of State, and the "warning" language appearing on the petition shall be applicable to the election requested to be conducted.

5.4.2 The procedures for issuing the statement of sufficiency or insufficiency of the petition shall conform to the requirements of section 1-40-117, C.R.S., and Rule 18 of these rules; except that such statement shall be issued by the water conservancy district named in the petition, unless otherwise ordered by the Court.

5.4.3 The procedures for cure of a petition deemed insufficient shall conform to the requirements of section 1-40-117, C.R.S., and Rule 19 of these rules; except any addendum to the petition shall be filed with both the Court and the water conservancy district named in the petition, unless otherwise ordered by the Court.

5.4.4 The procedures for protesting the determination that a petition is insufficient shall conform to the requirements of section 1-40-118, C.R.S., and Rule 20 hereof, unless otherwise ordered by the Court.

5.4.5 Any election pursuant to Section 37-45-114(2), C.R.S., shall be conducted no more than one hundred (100) days nor less than sixty (60) days from the date of the Court order, regardless of the actual expiration date of the term of the office, unless the Court order establishes an alternate date, or the water conservancy district has notified the Court that such election is to be conducted as a coordinated election pursuant to section 1-7-116, C.R.S.

5.4.6 The form and procedures for filing candidate nomination forms and call for nominations of persons desiring to be a candidate for the office to be voted upon at the Court-ordered election described in paragraph a of Rule 5.4.5, shall be in conformance with the form and procedures required for special districts under Article 1, Title 32, C.R.S., unless otherwise ordered by the Court.

5.5 Non-Partisan Elections: Polling Place Procedures.

5.5.1 For polling place elections being conducted in accordance with Article 1, Title 32, C.R.S., upon execution of the self-affirming oath or affirmation pursuant to section 32-1-806(2), C.R.S., the eligible elector desiring to vote shall show his or her identification as defined in section 1-1-104(19.5), C.R.S., to one of the election judges. *See* section 1-7-110(1), C.R.S.

5.5.2 If the eligible elector has executed the self-affirming oath or affirmation and provided his or her identification, such eligible elector may be allowed to vote, if such vote is not challenged. *See* sections 1-7-110(2) and 32-1-806(4), C.R.S.

5.5.3 The election supplies provided to the supply judge of each polling place shall include an adequate number of provisional ballot envelopes that include the affidavit set forth in Rule 26.8.

5.5.4 The signature and date on the provisional ballot affidavit envelope shall remain on the outside of the envelope.

5.5.6 The provisional ballot affidavit envelope shall be numbered to correspond to the number of the provisional elector's name in the poll book, and the word "provisional" shall be marked on the ballot.

5.5.7 Verification of Information in Provisional Ballot Affidavit. The designated election official shall verify the information contained in the provisional ballot affidavit pursuant to Rule 26. If the information contained in the affidavit provides adequate criteria such that the designated election official, using the Rule 26 search, can ascertain the registration of the elector, the provisional ballot shall count. If the information cannot be verified, the ballot shall be rejected. See sections1-8.5-105 and 1-8.5-106, C.R.S., and Rule 26.

5.5.8 The verification and counting of all provisional ballots shall be completed prior to the certification of the official abstract of votes cast in the election by the canvass board, pursuant to Section 1-10-203(1), C.R.S.

5.5.9 Canvassing Board's Count of Provisional Ballots. If, after the expiration of twelve days following an election, the election judges cannot complete the count of the provisional ballots cast, the canvassing board appointed pursuant to Section 1-10-201(1.5), C.R.S., shall complete the count of such provisional ballots.

5.5.10 If 25 or more provisional ballots have been cast and counted, the results shall be reported as one total. If less than 25 provisional ballots have been cast and counted, the results shall be included in the results of the mail-in ballots counted in the election.

5.5.11 The provisional ballot shall not be counted if the elector failed to complete the affidavit on the envelope or the elector was not registered by the deadline in the State of Colorado.

5.5.12 A copy of the provisional ballot affidavit shall be provided to the county clerk and recorder of the county of the elector's residence, and shall constitute a voter registration for future elections. *See* section 1-8.5-108, C.R.S.

Rule 6. Rules Concerning Coordinated Elections

6.1 Participation in coordinated elections.

6.1.1 For elections where the electors do not need to be registered electors, political subdivisions may conduct their own elections and must coordinate with the coordinated election official any ballot issue notice required by Article X, Section 20 of the Colorado Constitution.

6.1.2 The affected political subdivision shall enter into intergovernmental agreements which delineate which tasks shall be the responsibility of the designated election official of the political subdivision and which shall be the responsibility of the coordinated election official.

6.2 Procedures for Coordinated Elections Involving Jurisdictions Shared by Multiple Counties

6.2.1 Upon implementation of the statewide voter registration database, controlling counties shall be designated for the purpose of assigning and setting up shared races, issues, and questions in coordinated elections.

6.2.2 The controlling county shall be the county where the largest number of active registered electors within the jurisdiction reside at the time that the controlling county is designated. Once designated, the controlling county will not change regardless of any increase or decrease in the number of active registered electors.

6.2.3 The Secretary of State shall maintain and make available to county clerks on its website the list of controlling counties for each shared jurisdiction within the state.

6.2.4 The controlling county shall set up all certified races, issues, and questions in the statewide voter registration database, and make the information available to all counties sharing jurisdiction no later than the date of ballot certification.

a. The controlling county shall use only standard abbreviations approved by the Secretary of State in setting up the races, issues and questions for the shared jurisdiction.

b. After the controlling county has set up the shared races, issues and questions, no changes shall be made to the ballot order or to the numbers assigned without the approval of the Secretary of State.

c. All counties within the shared jurisdiction shall ensure that the races, issues and questions are printed on the ballot as certified by the Secretary of State or designated election official.

6.2.5 If any controlling county fails to fulfill its responsibilities in accordance with this Rule, any of the other counties in the shared jurisdiction may make a written request to the Secretary of State to temporarily assume the duties of the controlling county. The Secretary of State shall have the authority to act on behalf of the controlling county or to temporarily designate another county to act as the controlling county in order to assure implementation of this Rule.

6.3 Form of election for November coordinated elections.

6.3.1 The county clerk and recorder is the election official for coordinated elections which are held in November of each year.

(a) The county clerk and recorder shall be responsible for mailing the Article X, Section

20 Ballot Issue notice.

(b) The county clerk and recorder shall not be required to conduct more than one form of election unless he or she so chooses.

6.3.2 School districts that have the opportunity to participate in a coordinated election may not elect to hold separate mail ballot elections but must participate in the form of election chosen by the county clerk and recorder.

6.4 Form of coordinated elections held other than in November.

6.4.1 For all other elections where political subdivisions hold an election on the same day, the electors or boundaries overlap and ballot issues as defined in Section 1-1-104 (2.3), C.R.S., appear on the ballot of overlapping jurisdictions, the governing bodies or the designated election officials of such overlapping jurisdictions must name a coordinated election official who is responsible for assuring that the Article X, Section 20 notice is given.

6.4.2 The political subdivisions may contract with the appropriate county clerk and recorder to be the coordinated election official.

6.5 Determination of ballot issues and texts.

6.5.1 Each political subdivision shall prepare the list of candidates and the ballot title and text for ballot issues and ballot questions, as required by law.

(a) The coordinated election official shall assure that the ballot title is on each ballot as required by law.

(b) Political subdivisions may only require the coordinated election official to print the entire text of a ballot issue or ballot question on the ballot if they pay for any additional cost associated with printing and if sufficient space is on the voting equipment to print the entire text given the other issues, questions, and candidates on the ballot. The coordinated election official shall tell the political subdivision how much space is available for text for each position on the ballot. If the required ballot title and text is too long for the voting equipment, the coordinated election official may choose to conduct the election with a different form of ballot.

(c) For counties where ballot election material must be printed in languages other than English, the political subdivisions are responsible for assuring proper translation of all election materials related to that political subdivision and must pay their pro-rata share of increased printing costs unless otherwise provided by the intergovernmental agreement.

(d) For counties where election material is not required to be printed in languages other than English, the political subdivisions are not required to provide translation of all election materials nor pay a pro-rata share of the printing costs unless they so agree.

6.5.2 Each political subdivision shall determine the order of the ballot issues for their political subdivision in accordance with the requirements of Colorado Constitution Article X, Section 20 and Title 1.

(a) Initiatives shall be designated by a number; referred measures shall be designated by a letter or by a number and a letter.

(b) For each grouping of ballot issues and ballot questions by a political subdivision, all initiatives shall precede all referred measures.

(c) For each grouping of ballot issues and ballot questions, the order shall be as follows:

1. Initiatives to increase taxes;

2. Initiatives to retain excess revenues;

3. Initiatives to increase debt;

4. Other citizen petitions;

5. Referred measures to increase taxes;

6. Referred measures to retain excess revenues;

7. Referred measures to increase debt;

8. Other referred measures.

(d) For statewide measures, initiatives shall be numbered in the order in which the statements of sufficiency are issued. The numbers one through five shall be reserved for initiatives to increase taxes; the numbers six through ten shall be reserved for initiatives to retain excess revenues; the numbers eleven through fifteen shall be reserved for initiatives to increase debt; all other citizen petitions shall be numbered consecutively beginning with sixteen.

(e) Ballot issues from the various political subdivisions shall be ordered on the ballot as provided in section 1-5-407 (5), C.R.S:

1. Each category of initiated ballot issues and questions shall be numbered in the following series:

01-99	State Issues
100-199	County Issues
200-299	Municipal Issues
300-399	School District Issues
400-499	Ballot Issues and Questions for other political subdivisions greater than a county.
500-599	Ballot Issues and Questions for other political subdivisions which are wholly within a county.

2. Each category of referred ballot issues and questions shall be designated by a letter or a number and a letter in the following series:

A-Z	State Issues
1A-1Z	County Issues
2A-2Z	Municipal Issues
3A-3Z	School District Issues
4A-4Z	Ballot Issues and Questions for other political subdivisions greater than a county.
5A-5Z	Ballot Issues and Questions for other political subdivisions which are wholly within a county.

3. Ballot questions and issues are numbered or lettered in the order in which the measures are certified to the ballot by the designated election official after the protest period has ended, or if a protest was filed after the protest has been completed.

4. For other than state issues, if a county has multiple cities and/or multiple discrete school districts and other political subdivisions, the designated election official may either further subdivide the series and assign each political subdivision a specific series of numbers, or when the ballot is certified the designated election official may assign the final numbers/letters, making sure that all measures for each political subdivision are grouped together.

5. For other than state issues and questions, if the same ballot issue or question will be on the ballot in more than one county, the county clerks shall confer with one another and shall give the same ballot number or letter to the ballot issue or questions.

6. Each ballot question or issue shall contain the name of the political subdivision at the beginning of the ballot questions or issue. If the designated election official chooses, the name of the political subdivision may appear before the grouping of questions, such as State Ballot Questions, Arapahoe County Ballot Questions, City of Aurora Ballot Questions, etc.

6.5.3 General Provisions

(a) The coordinated or designated election official may include the following statement with the ballot issue notice: “This notice is mailed to each address with one or more active, registered electors. You may not be eligible to vote on all issues presented in this notice.”

(b) The coordinated or designated election official may include the following statement on the ballot issue notice: “The following is a summary of comments filed in favor of, or opposed to, the ballot issue.”

6.6 Colorado Constitution Article X, Section 20 notice requirements.

6.6.1 The state and local governments, excluding enterprises, have sole responsibility for drafting and distribution of the notice required by Article X, Section 20. Any or all of the responsibilities may be delegated to the coordinated election official in the intergovernmental agreement.

6.6.2 The notice shall be mailed to “All Registered Voters” at the mailing addresses of active registered electors in the county, as indicated on the voting record.

(a) Nothing shall preclude the coordinated or designated election official from sending notice of various elections to persons who are not eligible electors if the notice sent is part of the coordinated notice and if the sending arises from the official’s efforts to mail the notice at “least cost”.

(b) Nothing shall preclude the coordinated or designated election official from sending notice to each household in the county or political subdivision whether or not registered electors reside at that household as long as notice is sent which assures that all active registered electors are included on the mailing list.

(c) Nothing shall preclude the coordinated or designated election official from sending notice to each registered elector in a particular political subdivision.

6.6.3 The coordinated election official must include information in the package sent with the notice that tells electors whether the election is a mail ballot election, a polling place election, a vote center election or a combination of election forms.

(a) If the election is a polling place election or a vote center election, the notice of the location of the polling place or vote center may be included in the consolidated mailing.

(b) If a separate mail ballot election is being held by a political subdivision in the county at the same time as a polling place election or a vote center election, the notice shall include that information. Section 1-5-205, C.R.S.

6.6.4 If state statute allows the ballot issue notice and the ballot to be mailed at the same time, the ballot for the mail ballot election may be included with the notice.

6.6.5 The political subdivisions must provide all completed Article X, Section 20 notices in camera ready format or as otherwise specified.

6.6.6 The coordinated election official shall not be responsible for failure to meet the Article X, Section 20 constraints if the notice and summaries are not submitted by the political subdivision within the deadline and in the form required by the coordinated election official.

(a) The summaries of comments for and against ballot issues shall not include language of a generally recognized profane, indecent, immoral, offensive, scandalous or libelous character. No names of persons or private groups shall be included in any summary.

(b) For purposes of counting words and to verify the five hundred constitutional limit for each “pro” and each “con” summary, a hyphenated word, unless it is divided by a continuation hyphen at the end of a line, counts as two or more words. A number counts as one word, regardless of dollar signs, commas or periods within the number.

6.7 Written comments concerning ballot issues submitted to the designated election official for the political subdivision shall not be withdrawn after the end of the business day on the last Friday immediately preceding the forty-fifth day before the election.

Rule 7. Rules Concerning Polling Places

7.1 Polling place materials shall include, where applicable, HAVA information, voting demonstration display, signature card table, registration records or lists, poll books, electronic or paper, or completed signature cards, paper ballots and voting booths or DRE, provisional voting area or procedure and ballot box if provided.

7.2 For coordinated elections, polling places do not have to be within the political subdivisions which are participating in the election.

7.3 Polling places for partisan elections must be established no less than ninety days prior to an election and may only be changed pursuant to section 1-5-108, C.R.S. in the event of an emergency.

7.4 In the event the polling place is to be in a temporary structure that is not present at the time, a polling place notice is to be posted pursuant to section 1-5-106, C.R.S., the future location of the polling place shall nonetheless be posted at the required time, and notice shall continuously remain posted until 48 hours after the polling place is closed.

7.5 Vote Center Guidelines

7.5.1 In addition to the requirements of section 1-5-102.7, C.R.S., the following must be taken into consideration when determining the number and locations of vote centers:

a. Population Centers

b. Demographics

c. Size of proposed locations

d. Available parking

e. Accessibility requirements as set forth in section 1-5-703, C.R.S.

7.5.2 The designated election official shall publish a notice of hearing on its website for no less than fifteen days prior to the public hearing. The notice shall include:

a. The number and locations of vote centers proposed for use

b. The date, time and location of the hearing

7.5.2.1 If the designated election official does not regularly maintain a website, the notice shall be published in accordance with section 1-1-104(34), C.R.S., at least fifteen days prior to the public hearing.

7.5.2.2 A copy of the notice shall be posted in the office of the designated election official for the duration of the public comment period.

7.5.3 A public hearing shall be conducted by the designated election official no less than sixteen days after posting or publishing the notice of hearing.

7.5.3.1 The public hearing may be held in conjunction with a regular or special meeting of the governing board of the political subdivision. If requested by the designated election official, the governing board of the political subdivision may conduct the hearing.

7.5.4 Public comments received in writing prior to the hearing shall be entered into the record of the public hearing. Oral comments received at the hearing shall be entered into the record and may be limited to allow the proceedings to go forward with reasonable promptness and efficiency.

7.5.5 The designated election official may combine the notice and hearing for a primary election and general election in a calendar year.

7.6 Time in voting area. Pursuant to section 1-7-115, C.R.S., if voting booths in a polling place are all in use and eligible electors are waiting to use them, each voter shall be allowed a maximum time in a voting booth.

7.6.1 The maximum allowable time in a voting booth shall be fifteen (15) minutes. The secretary of state may issue an order to a designated election official requiring or allowing additional time based on the length of the ballot.

7.6.2 Notwithstanding Rule 7.6.1, there shall not be a maximum allowable time for voters with disabilities.

Rule 8. Rules Concerning Watchers

8.1 Definitions:

8.1.1 "Official Observer" means either an observer appointed by the Secretary of State or an observer appointed by the federal government and approved by the Secretary of State. Official Observers may be present in all phases of the election process, but are subject to rules and regulations as prescribed by the Secretary of State and perform duties as may be assigned by the Secretary of State.

8.1.2 "Watcher" shall mean an eligible elector other than a candidate on the ballot who has been selected by a political party chairperson on behalf of the political party, by a party candidate at a primary election, by an unaffiliated candidate at a general, congressional vacancy or nonpartisan election or by a person designated by either the opponents/proponents in the case of a ballot issue or ballot question. If selected by a political party chairperson, a party candidate, or an unaffiliated candidate, the watcher shall be affiliated with that political party or unaffiliated as shown on the registration books of the county clerk and recorder. *See* section 1-1-104(51), C.R.S.

8.1.3 "Media Observer" shall mean an observer with valid and current media credentials from the media who shall adhere to the formal document "Guidelines for Members of the Media Who Observe Election Counts and Recounts" dated June 2004, as may be amended, which are incorporated herein by this reference for all proper purposes.

8.2 Qualification of Watchers. Watchers shall certify they are qualified pursuant to sections 1-1-104(51), 1-7-105, 1-7-106, 1-7-107, and 1-7-108(2), C.R.S. Watchers shall take an oath as provided in section 1-7-108(1) and shall, upon first entering the precinct place or location, surrender to the election official or election judges a certificate of appointment at each precinct polling place or location where the watcher has been designated to act.

8.2.1 If a watcher leaves a precinct and the same watcher returns later in the day to the same precinct, another certificate of appointment is not necessary and shall not be required. The original certificate of appointment will suffice.

8.2.2 If a watcher is replaced during the day, the watcher replacing the original watcher must have an original certificate of appointment for that precinct.

8.2.3 Certificate of appointment as a watcher is not transferable to another individual.

8.3 Political party attorneys are not allowed in the polling place unless they are duly appointed as watchers.

8.4 Watchers are not allowed to have cell phones, cameras, recording devices, laptops or PDAs (Palm Pilot, Blackberry, etc.) in the polling place.

8.5 List of Eligible Electors. To assist Watchers in performing their tasks, the election official or election judge shall provide a list, log, check-in card or other similar information of voters who have appeared in the precinct polling place to vote. The information or documents shall not be removed from the polling place or voting location. Watchers may maintain a list of eligible electors who have voted by utilizing only that information provided by the election official or election judge, except that they may bring with them into the polling place or location a list of electors previously maintained by the Watcher. Section 1-7-108(3), C.R.S.

8.6 Watchers shall be subject to the provisions of section 1-5-503, C.R.S.

8.7 What Watchers May Observe. Duly appointed Watchers may observe polling place voting, early voting and the processing and counting of precinct, provisional, mail, and mail-in ballots. For mail ballot elections, or mail-in ballot processing, watchers may be present at each stage of the election including the receiving and bundling of the ballots received by the designated election official. Watchers may be present during provisional ballot processing but may not have access to confidential voter information.

8.8 Limitations of Watchers. Duly appointed Watchers may observe election judges but may not interrupt or disrupt the processing, verification and counting of any ballots or any other stage of the election. Watchers may track the names of electors who have cast ballots by utilizing their previously obtained lists, but may not write down any ballot numbers or any other identifying information about the electors. Watchers may not handle the poll books, official signature cards, ballots, mail ballot envelopes, mail-in ballot envelopes or provisional ballot envelopes, voting or counting machines or machine components. Watchers shall not interfere with the orderly process and conduct of any election, including ballot issuance, receiving of ballots, voting or counting of the ballots. Watchers may not be allowed to interact with election officials or election judges, except that each designated election official shall name at least one individual in each precinct polling place or election location to whom Watchers may direct questions or from whom watchers may seek requested information.

8.9 Parties May Appoint Watchers. Major and minor political parties with candidates on the ballot may appoint one Watcher each to be present to observe polling place voting, early voting, and the processing and counting of regular, provisional, mail and mail-in ballots. *See* sections 1-7-105 and 1-7-106, C.R.S.

8.10 Official Observers Appointed by the Federal Government. Official Observers appointed by the federal government shall be approved by the Secretary of State and shall be subject to Colorado law and these rules as they apply to Watchers; however, they need not be eligible electors in the jurisdiction in which they act as Watchers. This Rule shall not apply to Official Observers appointed by the United States Department of Justice. Official Observers appointed by the Secretary of State shall be subject to the rules and regulations as prescribed by the Secretary of State. Official Observers shall obtain from the Secretary of State, or his or her designee, duly executed letters of authority. The Official Observers shall surrender such letter of authority to the designated election official in the jurisdiction in which they act as Watchers.

8.11 Watchers, Official Observers and Media Observers at a Recount. Watchers, Official Observers and Media Observers may be present at a recount. Watchers, Official Observers and Media Observers must be qualified and sworn for a recount in the same manner as provided in Rule 8.2 and are subject to all other provisions related to the recount process. Any political party, candidate involved in the recount or proponents or opponents of an issue or question involved in the recount may appoint one Watcher to be present at any time during the recount. The candidate who is subject to a recount may appoint him or her self, or a member of the candidate's family by blood or marriage, as a watcher at a recount. *See* sections 1-7-105 and 1-7-106, C.R.S.

8.12 Media Observers. Media Observers with valid and current media credentials may be present to witness early voting, election day voting and the processing and counting of provisional, mail and mail-in ballots. However, at the discretion of the county clerk and recorder, Media Observers may be required to appoint one member of the media as a pool reporter, and one member as a pool photographer to represent all media observers in accordance with the Guidelines established by the Colorado Press Association in conjunction with the Colorado County Clerks' Association and the Secretary of State as set forth herein:

Guidelines for Member of the Media Who Observe Election Counts and Recounts (to be distributed to members of the Colorado Press Association):

The Colorado State Association of County Clerks and Recorders, Colorado Broadcasters' Association and Colorado Press Association have collaborated to develop the following guidelines and protocols for use when members of the media observe the counting or recounting of ballots. You are strongly encouraged to follow these guidelines to allow meaningful media access while not disrupting the work of county clerks to count ballots or doing anything to compromise the integrity of the election process.

1. *If practical, please contact the election official's office prior to coming to observe the counting of ballots. If the election official knows you are coming, it will be easier to accommodate your request for a place to observe the count or to interview an election official.*

2. *At the discretion of the election official, a specific viewing area for members of the media and other observers may be available. To the extent practicable, the area will have been designated with sight lines to allow you to observe and take pictures or video of the counting process. If there are insufficient sight lines for you to take the photos or video you need, the election official may be able to make arrangements to accommodate your needs.*

3. *Please observe counting procedures without disrupting the count. Please take pictures or video without the use of supplemental lighting. Do not talk to people participating in counting ballots. There may be workers who ask you not to include their images in your pictures or video. We encourage you to honor those requests if you can reasonably do so.*

4. *The Secretary of State's election rules state that if observers leave the area during a recount, they may not reenter without the consent of the election official. If you have occasion to leave the area, you may be denied re-admittance.*

5. *Please do not use the information you see when observing vote counts to report on partial election results. Please do not report anything that could be used to identify the person who casts a particular ballot.*

The Colorado State Association of County Clerks and Recorders, Colorado Broadcasters' Association and Colorado Press Association are all committed to working together to ensure the media has access to election counts and recounts, but that access is afforded in manners that do not disrupt the counts and do nothing to compromise the integrity of the process. Your cooperation in following these standards will help us to meet all these goals.

8.13 Watchers at Vote Centers. To assist Watchers in performing their tasks when a vote center election is held, the designated election official shall provide a list of all voters who have appeared in the vote centers to vote. This list shall be made available at the designated election official's main office. Such list may be made available to a requesting Watcher(s) in the form of data files, paper or reports, and furnished to all interested parties via email, paper reports, or faxed copies as may be available to the designated election official.

Rule 9. Rules Concerning Assistance to Disabled Voters

9.1 A sign providing substantially as follows shall be posted at the polling place/vote center:

NOTICE
VOTING ASSISTANCE FOR ELECTORS WITH DISABILITIES

Colorado law provides that a voter has a legal right to assistance in voting if assistance is needed because of blindness or other physical disability or inability to read or write. The following procedures apply:

1. *The voter must inform one of the election judges that he or she needs assistance.*

2. *The voter may be assisted by any election judge or by any eligible elector selected by the voter.*

3. *The person selected must complete a 'voter assistance/disabled voter self-affirmation form' if all of the following apply:*

   - *The person selected is not an election judge; and*

   - *The person selected is not the spouse, parent, grandparent, sibling or child eighteen years of age or older, of the voter requesting assistance; and*

   - *The person selected has assisted any other voter at the same election in the same precinct. Section 1-7-111(1)(b), C.R.S.*

   - *The self-affirmation form states, 'I, ……., certify that I am the individual chosen by the disabled elector to assist the disabled elector in casting a ballot.'*

4. *The person selected may provide any assistance needed by the voter, including entering the voting booth and preparing the ballot or operating the voting machine.*

5. *The person providing assistance shall not seek to persuade or induce the voter to vote in a particular manner.*

6. *The election judges shall record the name of each eligible elector assisted and the name of each person assisting by making an entry in the pollbook or list of eligible electors (or by making an entry on the signature card when preprinted signature cards are used in the*

place of a pollbook and list of eligible electors).

9.2 When a voter has spoiled two ballots and requests a third ballot, an election judge shall offer assistance in voting procedures and casting the ballot.

Rule 10. Rules Concerning Ballots and Election Supplies

10.1 The text of all ballot issues that are subject to Article X, Section 20 shall be printed in all capital letters. The names of all candidates and all other ballot issues and questions shall be printed in upper and lower case.

10.2 If a ballot has been printed in error, the designated election official shall consult, as soon as the error is discovered, with the Secretary of State and follow the direction of the Secretary of State on the appropriate method of correction.

10.3 If there is no candidate on the ballot for any particular office, the ballot shall read, "No candidate for this office."

10.4 Candidates whose names are listed on a ballot must provide an audio recording of the pronunciation of their name to the Secretary of State prior to the election for offices that are voted on by the electors of the entire state, or of a congressional district, or for the offices of members of the general assembly or district attorney or a district office of state concern.

10.4.1 For candidates designated by a major or minor party, such audio recording shall be provided no later than the last day upon which the candidate acceptance may be filed with the Secretary of State in accordance with Article 4 of title 1, C.R.S. The audio recording of the candidate's name shall be recorded exactly as it is provided on the candidate acceptance form that is submitted to the Secretary of State, and as they wish it to appear on the ballot.

10.4.2 For candidates nominated by petition, such audio recording shall be provided no later than the last day upon which the petition of nomination and candidate acceptance may be filed with the Secretary of State in accordance with Article 4 of title 1, C.R.S. The audio recording of the candidate's name shall be recorded exactly as it is provided on the candidate acceptance form that is submitted to the Secretary of State, and as they wish it to appear on the ballot.

10.4.3 For unaffiliated candidates for president who seek placement on the General Election ballot by submitting a candidate's statement of intent and a filing fee to the Secretary of State in accordance with section 1-4-303(1), C.R.S., such audio recording shall be provided no later than the last day upon which the candidate's statement of intent may be filed with the Secretary of State in accordance with Article 4 of title 1, C.R.S. The audio recording of the candidate's name shall be recorded exactly as it is provided on the candidate's statement of intent that is submitted to the Secretary of State, and as they wish it to appear on the ballot.

10.4.4 For district and county judges seeking retention, such audio recording shall be provided no later than the date upon which the declaration of intent to run for retention in a judicial office may be filed with the Secretary of State in accordance with Article VI, Section 25 of the Colorado Constitution. The audio recording of the candidate's name shall be recorded exactly as it is provided on the declaration of intent to run for retention in a judicial office that is submitted to the Secretary of State, and as they wish it to appear on the ballot.

10.5 County, municipal, school district, and special district candidates whose names are listed on a ballot for an election coordinated by the county clerk and recorder must provide an audio recording of the pronunciation of their name to the county clerk and recorder prior to the election for offices that are voted on by the electors of the county, municipality, school district, or special district.

10.5.1 For candidates designated by a major or minor party, such audio recording shall be provided no later than the last day upon which the designated election official certifies the ballot content to the county clerk and recorder in accordance with section 1-5-203(3)(a), C.R.S. The audio recording of the candidate's name shall be recorded exactly as it is provided on the candidate's statement of intent that is submitted to the designated election official, and as they wish it to appear on the ballot.

10.5.2 For candidates nominated by petition, such audio recording shall be provided no later than the last day upon which the designated election official certifies the ballot content to the county clerk and recorder in accordance with section 1-5-203(3)(a), C.R.S. The audio recording of the candidate's name shall be recorded exactly as it is provided on the candidate's statement of intent that is submitted to the designated election official, and as they wish it to appear on the ballot.

Rule 11. Rules Concerning Voting Systems

11.1 Definitions

11.1.1 "Central Count" shall mean a ballot counting process whereby cumulative voting totals are tabulated for multiple precincts and multiple ballot styles at a single location.

11.1.2 "Election Setup Records" shall mean the electronic records generated by election tabulation software during election setup to create and define ballots, tabulation instruction, and other functions related to the election.

11.1.3 "Electronic Ballot" shall mean a ballot that is presented to the voter in a non-paper form such as on a touch screen or through audio feedback. After a voter casts an electronic ballot, the voter's choices may be:

- Marked and printed on a paper ballot for subsequent counting by a paper ballot scanning device; or
- Digitally recorded and counted by the touch screen device, commonly referred to as a Direct Record Electronic (DRE) device.

11.1.4 "Election Software" shall mean the software to be installed or residing on election equipment firmware or on election management computers that control election setup vote recording, vote tabulation and reporting.

11.1.5 "Electronic Voting Device" shall mean a device by which votes are recorded electronically, including a touch screen system.

11.1.6 "Electronic Vote-Tabulating Equipment" or "Electronic Vote-Counting Equipment" shall mean any apparatus that examines and records votes automatically and tabulates the result, including but not limited to optical scanning equipment. The term includes any apparatus that counts votes electronically and tabulates the results simultaneously on a paper tape within the apparatus, that uses and electronic device to store the tabulation results, and that has the capability to transmit the votes into a central processing unit for purposed of a printout and an official count.

11.1.7 “Electromechanical Voting System” shall mean a system in which an elector votes using a device for marking a paper ballot using ink or another visible substance and the votes are counted with electronic vote-tabulating equipment, or a system in which votes are directly recorded electronically within the equipment on paper tape and are recorded simultaneously on an electronic device that permits tabulation at a counting center.

11.1.8 “Firmware” shall mean computer programs, stored on read-only memory devices or other electronic circuitry in voting devices, WHICH control the basic operation and functioning of those devices.

11.1.9 “Logic and Accuracy Test (LAT)” shall mean a step by step documented review of a voting device’s ability, prior to use in any election, to produce accurate results on voter choices for the candidates and ballot issues in an election. The Logic and Accuracy test shall fulfill the requirements OF the Public Test as identified in section 1-7-509(2), C.R.S.

11.1.10 “Precinct Count” shall mean a ballot counting process whereby voting totals are tabulated for single/multiple precincts OR single/multiple ballot styles at individual polling place locations.

11.1.11 “Secure” as USED in section 1-7-505, C.R.S., shall mean any method of preventing the use of the voting equipment prior to and after all legal votes are cast.

11.1.12 “Vote Center Count” shall mean a ballot counting process whereby cumulative voting totals are tabulated for multiple precincts and multiple ballot styles at multiple locations.

11.1.13 “V-VPAT” shall mean “voter verified paper record” as defined in section 1-1-104(50.6), C.R.S.

11.1.14 “Voting System” shall mean a system that facilitates the process of casting, recording, and tabulating votes using electromechanical or electronic devices or ballot cards and includes, but is not limited to, the procedures of casting and processing votes and the operating manuals, hardware, firmware, printouts, and software necessary to operate the voting system.

11.1.15 “Voting System Provider” shall mean an individual engaged in private enterprise or a business entity engaged in selling, leasing, marketing, designing, building, or modifying voting systems to the state, a political subdivision of the state, or another entity authorized to hold an election under Title 1 of the Colorado Revised Statutes.

11.1.16 “Zero Tape” shall mean a printout of the internal data registers in electronic vote-tabulating equipment indicating that those registers contain values of “Zero (0)” and reflect no voter choices for any candidate or ballot issue.

11.2 Voting System Access

11.2.1 The county clerk and recorder shall not program or operate the voting system subject to section 1-5-607, C.R.S.

11.2.2 Any election setup materials shall be stored by the county clerk and recorder under security with access limited to the person or persons so authorized in writing by the county clerk and recorder.

11.2.3 Employees of the county clerk and recorder who are authorized by the county clerk and recorder to prepare or maintain the voting system or election setup materials shall be deputized by the county clerk and recorder for this specific purpose and so sworn prior to

the first election of the calendar year in which they will be performing one or more of these activities.

11.2.4 The county clerk and recorder shall request an Internet Criminal History Check (ICHC) from the Colorado Bureau of Investigation (CBI) for all full-time, part-time, permanent and contract employees of the county who staff the counting center and who have any access to the electromechanical voting systems or electronic vote tabulating equipment. At the direction of the county clerk and recorder, an ICHC check may be conducted on election judges. The county clerk and recorder shall request the ICHC once per calendar year for such employees prior to the first election of the year.

11.2.5 If the ICHC indicated that the employee or contract employee has been found guilty of a crime involving breach of trust, fraudulent, coercive, or dishonest practices or demonstrating incompetence, untrustworthiness, or election offenses pursuant to sections 1-13-101 *et seq.,* C.R.S., the county clerk and recorder shall prohibit such employee or contact employee from preparing, programming, operating, using or having any access whatsoever to electromechanical voting systems or electronic vote tabulating equipment at any time during that person's employment.

11.2.6 Vendors or their authorized representatives shall provide a criminal history check to the county clerk and recorder for any employee of the vendor who has any access to electromechanical voting systems or electronic vote tabulating equipment. The vendor shall provide the criminal history check to the county clerk and recorder once per calendar year for such employees prior to the first election of the year.

11.3 Performance Bond

11.3.1 Effective upon the date of the adoption of this rule, a Voting System Provider or service provider that provides election setup or tabulation services to one or more counties shall:

(a) Provide the services by written contract, a copy of which shall be kept on file with the county clerk and recorder and the Secretary of State;

(b) Post a Performance Bond, executed by a corporate surety licensed to transact business in the State of Colorado. The county under contractual obligation with the Voting System Provider or service provider that provides election setup or tabulation services shall be designated as the Beneficiary of the bond; and

(c) Provide proof that a performance bond has been posted with the Secretary of State and the office of the designated election official. The amount of the bond shall be the greater of either$10,000 or the full amount of the contract with the beneficiary county.

11.3.2 Performance bonds shall be on file 30 (thirty) days prior to any work commencing under contract with the county.

11.3.3 The Voting System Provider shall update all bond documents for each contract or election performed.

11.3.4 Copies of the performance bond for the secretary of state's office shall be sent to: Colorado Department of State, Voting Systems Specialist, 1700 Broadway, Suite 270, Denver, Colorado 80290, or to voting.systems@sos.state.co.us

11.4 Voting System Inventory

11.4.1 The designated election official shall maintain an inventory record for each electronic vote-tabulating device used in an election. Such records shall include but not be limited to the manufacturer, make, model, serial number, hardware/firmware/software version or release number, date of acquisition, description of any services, repairs, maintenance, upkeep, and version upgrades, and the dates of performance of such services as of the date of adoption of these rules.

11.4.2 The designated election official shall furnish the Secretary of State with an extract or copy of the inventory for use in the Logic and Accuracy Test and the Post-Election Audit Test. The requirements for this extract are:

(a) Be in either electronic or paper format;

(b) Contain information regarding: make, model, serial number, type (optical scanner or DRE), specific location of use, and specific precincts programmed on each device or card;

(c) Inventories maintained in electronic format shall be exportable to an industry standard file type – comma separated (CSV), excel spreadsheet (XLS), or Quote or Tab separated (TXT) file prior to electronic delivery to the Secretary of State; and

(d) The designated election official shall send the inventory list to the Secretary of State's office not less than ten (10) days prior to an election to the attention of the Voting Systems Specialist. Inventory lists may be sent in one of three means: E-mail: voting.systems@sos.state.co.us Subject line = County Number, County Name, HARDWARE INVENTORY LIST; or Via facsimile to: 303-869-4861 attn: Secretary of State, Voting Systems Specialist; or via First Class Mail to Colorado Department of State/Attn: Voting Systems Specialist/1700 Broadway – Suite 270/Denver, CO 80290.

11.5 Voting System Testing

11.5.1 Three types of voting system testing shall be performed for each election within a jurisdiction. The three tests are:

- A Hardware Diagnostic Test;
- A Logic and Accuracy Test (LAT); and
- A Post-Election Audit Test.

11.5.2 Hardware Diagnostic Test

11.5.2.1 The county clerk and recorder shall commence the Hardware Diagnostic Test prior to the election and allow time for each electronic voting device within the county to be tested. Each device being used in the election, including units identified as spare or backup units, shall be tested to verify that mechanical components are working correctly. This test shall include, but not be limited to, the following tests:

(a) All input and output devices;

(b) Communications ports;

(c) System printers;

(d) System modems when applicable;

(e) System Screen displays;

(f) Boot performance and initializations;

(g) Firmware loads;

(h) Software loads;

(i) Confirmation that screen displays are functioning; and

(j) Date, time and calibration of systems.

11.5.2.2 Each device tested shall be sealed upon the successful completion of the test. Documentation of the seal information must be maintained for each device.

11.5.3 Logic and Accuracy Test

The designated election official shall conduct a Logic and Accuracy Test according to the following requirements.

11.5.3.1 The designated election official shall create a Testing Board consisting of at least two persons, one from each major political party.

11.5.3.2 Prior to the commencement of voting, the designated election official shall conduct the public Logic and Accuracy Test.

11.5.3.3 The Logic and Accuracy test shall be open to representatives of the press and the public to the extent allowable and pursuant to section 1-7-509(2)(b), C.R.S. The designated election official may limit the number of representatives from each group to accommodate for space limitations and other considerations.

11.5.3.4 Testing Board Test Ballots – In preparation for the Logic and Accuracy Test, the designated election official shall provide to each member of the Testing Board, at least twenty-five (25) ballots that are clearly marked as test ballots to be used for the Logic and Accuracy Test.

11.5.3.5 The members of the Testing Board shall secretly vote their position and retain a record of the tally of their test votes. The test ballots shall have a known predetermined outcome by the members of the Testing Board's secret vote and tally. Of the twenty-five test ballots, two shall be tested as audio ballots where applicable.

11.5.3.6 County Test-Ballots – In preparation for the Logic and Accuracy Test, the designated election official shall prepare a sufficient number of test ballots that represent every precinct which shall include every ballot style, allow for a sufficient number of ballots to mark every vote position for every candidate on every race including write-in candidates, allow for situations where a race may permit an elector to vote for two or more positions, and include overvotes and undervotes for each race.

11.5.3.7 The test ballots shall be tested on each type of voting device utilized in a given election and each method of counting. The tests shall include testing of mail-in ballot counting methods, election day counting methods, provisional ballot counting methods, early voting counting methods and audio ballots, if applicable.

11.5.3.8 Conducting the Test

11.5.3.8.1 The designated election official and Testing Board shall observe the tabulation of all test ballots by means of the voting device and compare the tabulation with the previously retained records of the test vote count. The cause of any discrepancies shall be corrected prior to the start of vote tabulation.

11.5.3.8.2 Prior to the start of testing, all devices used will have the public counter reset to zero, and presented to the testing board for verification.

11.5.3.8.3 An appropriate number of voting devices will be available and the testing board may witness the necessary programming and/or downloading of memory devices necessary to test the specific precincts.

11.5.3.8.4 The Testing Board and designated election official or his or her designated deputized clerks, as necessary, shall count the test ballots as follows:

(a) Mail-in Ballots:

(1) All county test ballots shall be counted on at least one, but not more than three, mail-in ballot vote counting devices and have the predetermined total verified to the machine total.

(2) All Testing Board Member test ballots shall be counted individually with reports generated to verify the machine count to the predetermined hand tally.

(b) Precinct Count Ballots (Optical Scan and DRE):

(1) The Testing Board shall randomly select 20% but not more than 10 ballots representing unique precincts from the Testing Board's test ballots.

(2) In the event a selected precinct contains a combination of DRE and Optical Scan voting devices, the Testing Board shall decide on the percentage of ballots to be counted on each type of device used for that precinct.

(3) The precinct specific county test ballots will be added to the testing board test ballots to be counted on the specific precinct device. The testing board shall manually verify the ballots to be counted prior to any machine count.

(4) The Testing Board shall verify the manual count to the voting device count.

(c) Vote Center Count Ballots – Optical Scan:

(1) All testing board test ballots shall be counted on at least one, but not more than 5 voting devices designated for Vote Center Counting and have the predetermined total verified to the machine total.

(2) All test ballots shall be counted individually with reports generated to verify the machine count to the predetermined tally of the test ballots.

(3) The testing board shall randomly select the machines to be tested.

(d) Vote Center Count Ballots – DREs:

(1) All testing board test ballots shall be counted on at least one, but not more than 5 DREs designated for Vote Center Counting and have the predetermined total verified to the machine total.

(2) All test ballots shall be counted individually with reports generated to verify the machine count to the predetermined tally of the test ballots.

(3) The testing board shall randomly select the machines to be tested.

(e) Early Voting and Provisional Ballots Counted on Optical Scan Devices:

(1) All test ballots shall be counted on at least one, but not more than five, optical scan devices designated for Early Voting or Provisional Ballot Counting and have the predetermined total verified to the machine total.

(2) All test ballots shall be counted individually with reports generated to verify the machine count to the predetermined tally of the test ballots.

(f) Early Voting and Provisional Ballots Counted on DREs:

(1) All test ballots shall be counted on at least one, but not more than five, DREs designated for Early Voting or Provisional Ballot Counting and have the predetermined total verified to the machine total.

(2) All Testing Board Member test ballots shall be counted individually with reports generated to verify the machine count to the predetermined tally of the Testing Board test ballots.

11.5.3.8.5 DREs equipped with V-VPAT devices shall be manually verified (by hand) to determine that the pre-determined total of the testing board ballots, matches the V-VPAT total, which in turn matches the machine total.

11.5.3.8.6 At least two of the testing board ballots shall be identified as Audio Ballots to be tested as such, and included with the count.

11.5.3.8.7 All test materials, when not in use, shall be kept in a metal box with individual seals for each member of the Testing Board. The designated election official may affix his or her own seal in addition to those of the Testing Board. The designated election official shall be the custodian of the box or boxes but shall not open and/or use the test materials outside of the presence of the Testing Board.

11.5.3.8.8 The Testing Board and the designated election official shall sign a written statement attesting to the qualification of each device that was successfully tested, the number of the seal attached to the voting device at the end of the test, any problems discovered, and provide any other documentation as necessary to provide a full and accurate account of the condition of a given device.

11.5.3.8.9 Upon completion of the testing, the Testing Board shall witness the resetting and sealing of each tested voting device.

11.5.4 Post-Election Audit

11.5.4.1 Within twenty-four (24) hours of the close of polls on election night, the Secretary of State shall notify the designated election official which voting devices and which race or races on the ballots have been selected for auditing purposes based on the submitted hardware inventory list referred to in Rule 11.4.2.

11.5.4.2 The selection of equipment will be based on a random selection of five (5) percent of precinct scanner based voting equipment, at least one Central Count Scanner/vote center, and five (5) percent of Direct Record Electronic (DRE) voting devices.

11.5.4.3 Pursuant to section 1-7-514, only devices used in the election shall be selected for the audit.

11.5.4.4 For optical scanners used for any function of counting ballots except for Central Count/vote center as defined herein, the designated election official shall manually verify all of the ballots that were counted on the randomly selected device(s) with the election summary report that was generated from the device(s) at the close of the polls. The Secretary of State shall randomly select a minimum of two (2) races per device to be manually verified to ensure that each office, issue, and question on the ballot is audited in accordance with section 1-7-514, C.R.S.

11.5.4.5 For Optical Scanners used for the purpose of counting ballots in a Central Count/vote center environment as defined herein, the designated election official shall randomly select five (5) percent but not more than five hundred (500) ballots of all the ballots counted on the specific audited device. If the amount of ballots is less than five hundred (500) on the audited device, then a

minimum of twenty percent (20%) of the ballots counted on the device will be manually verified. The public counter for that voting device shall be reset to zero, and the ballots shall be recounted on the voting device. A new report will be generated from the electronic count of the ballots and shall be manually verified. The ballots and a copy of the report shall be sealed in a separate container and secured with the remainder of the official election records for the election. The Secretary of State shall randomly select a minimum of two (2) races per device to be manually verified to ensure that each office, issue, and question on the ballot is audited in accordance with section 1-7-514, C.R.S.

11.5.4.6 For Direct Record Electronic Devices (DREs) that do not meet the requirements of section 1-5-802, C.R.S., used for any function of counting ballots in an election, the designated election official will manually verify the image of all the ballots contained in the Ballot Log or Ballot Audit that were counted on the specific device with the report generated for that specific device at the close of polls which contains the election summary report. The Secretary of State shall randomly select a minimum of two (2) races per device to be manually verified to ensure that each office, issue, and question on the ballot is audited in accordance with section 1-7-514, C.R.S.

11.5.4.7 For Direct Electronic Devices (DREs) that do meet the requirement of section 1-5-802, C.R.S., used for any function of counting ballots in an election, after the close of the polls, the designated election official will manually verify all of the voter verified paper record produced with the report generated for that specific device, which contains the election summary report. The Secretary of State shall randomly select a minimum of two races on each device to be manually verified to ensure that each office, issue, and question on the ballot is audited in accordance with section 1-7-514, C.R.S.

11.5.4.8 The actions of the random audit as identified in this section are to be observed by at least two members of the canvass board. The designated election official may appoint additional deputized clerks to assist in the functions of the audit.

11.5.4.9 If there are discrepancies in the audit, the canvass board or the designated election official's deputized clerks shall:

11.5.4.9.1 First, manually verify the results as many times as necessary to confirm that there is no discrepancy in the manual count;

11.5.4.9.2 Second, take any additional steps as necessary to check for voter error, which shall include but not be limited to: over-votes, stray marks on the ballot, or other voter intent indicia; and

11.5.4.9.3 Third, review the situation and take action as necessary in accordance with the canvass board's powers as set forth in part 1 of Article 10 of Title 1 Colorado Revised Statutes.

11.5.4.10 At all times relevant to the Post-Election Audit, the designated election official or the deputized clerks or the canvass board shall take every precaution necessary to protect the confidentiality of the ballots cast by the electors.

11.5.4.11 Upon completion of the audit, the designated election official shall promptly report the results of the audit to the Secretary of State's Office. The report shall be submitted following the completion of the audit and up to and including 5:00 pm on the last day of the canvass. The report shall contain:

(a) The make, model, and serial number of the voting device that was audited.

(b) The number of ballots originally counted by the device or the number of ballots audited as identified in paragraph (d) of this section;

(c) The count of the specific race or races as provided on the summary report printed at the close of polls or the report generated for the audit;

(d) The count of the specific race as manually verified;

(e) Any other information required by section 1-7-514, C.R.S.; and

(f) The signature of the canvass board and the designated election official.

11.5.4.12 The report may be sent by any of the following three methods: E-mail: voting.systems@sos.state.co.us; Subject line = County Number, County Name, POST-ELECTION AUDIT; or via facsimile to: 303-869-4861 attn: Secretary of State, Voting Systems Specialist; or via First Class Mail to Colorado Department of State/ Attn: Voting Systems Specialist/1700 Broadway – Suite 270/Denver, CO 80290.

11.6 Procedures for Voter-Verifiable Paper Audit Trail (V-VPAT)

11.6.1 Security

11.6.1.1 The V-VPAT record is considered an official record of the election, pursuant to section 1-5-802. All security procedures related to election ballots shall apply to V-VPAT records.

11.6.1.2 The housing unit for any V-VPAT record to be used in the election shall be sealed and secured prior to any votes being cast for the election. Documentation of the seal number(s) must be maintained and noted prior to voting, and at the conclusion of voting.

(a) Election Judges shall attest to the V-VPAT record having no votes included on the paper record prior to the start of voting, and prior to the installation or replacement of a new V-VPAT record.

11.6.1.3 If a DRE with V-VPAT is used during early voting, the seal number(s) must be recorded at the beginning and end of each voting day.

11.6.1.4 At the Close of the polls, the V-VPAT records will be transferred to the central office in the same manner as any paper ballots. In the absence of paper ballots, the V-VPAT records will be transferred to the central office in the same manner as any memory cards containing electronic ballots.

11.6.2 Anonymity

11.6.2.1 The Election Official shall put measures in place to protect the anonymity of voters choosing to vote on DREs during the voting periods. These measures shall include:

(a) Encouraging poll workers to personally vote on DREs when possible to ensure more than one vote will be cast on the device.

b) Appropriate marking in Poll Book or other voting list indicating voters choice to vote on DRE with the words: “Voted DRE”, or similar in place of paper ballot information. No record shall be kept indicating the order in which people voted on the DRE, or which V-VPAT record is associated with the voter.

(c) When more than one DRE is available at a voting location, the voter shall be given the choice as to which DRE they would like to vote on, to the extent practical.

(d) Encouraging or allowing any and all voters the opportunity to vote on a DRE if desired.

11.6.2.2 Any report or export (electronic or paper based) generated from an Electronic Pollbook shall remove the date/time stamp from the record and not use this field as a sort method. Any assignment of Record IDs, Key ID, or Serial Number stored in the database of votes shall be randomly assigned.

11.6.2.3 Any Pollbook, electronic, paper or otherwise shall not be exposed to the same people at the same place who have exposure to the V-VPAT records.

11.6.2.4 The examination of the V-VPAT record shall always be done by at least two witnesses.

11.6.3 Storage

11.6.3.1 The storage of the V-VPAT records must be consistent with storage of Paper Ballots pursuant to section 1-7-802.

11.6.3.2 Individual spools containing V-VPAT records must contain the following catalog information affixed to the spool:

(a) Date and Name of Election;

(b) Name of Voting Location;

(c) Date(s) and Time(s) of Voting;

(d) Machine Serial Number of DRE Associated with the Record; and

(e) Number of spools associated with this machine for this election (i.e. “Spool 1 of 1”, or “Spool 1 of 2”, etc.).

11.6.3.3 Light sensitive storage containers shall be used for the 25 month storage period to ensure the integrity of the V-VPAT paper record. Containers shall be sealed, with record of the seal numbers maintained on file and signed by two elections officials.

11.6.3.4 A master catalog shall be maintained for the election containing the complete total number of V-VPAT spools used in the election.

11.7 Escrow of County Election Setup

11.7.1 No later than 5:00pm on the seventh (7th) day prior to any election, the designated election official shall deposit a copy of the election setup records with the Secretary of State's office by mail.

11.7.2 Jurisdictions that have contracted with either a Software Service Bureau or a Vendor of Electronic Vote Counting Equipment may choose to have the necessary election setup records delivered to the Secretary of State's office within the specified time frame.

11.7.3 Election Setup Records shall be contained within an electronic media format that is native to the jurisdictions specific ballot creation and tabulation system. Acceptable media formats range from Tape, Diskette, Cartridge, CD-ROM, DVD-ROM, Floppy, External Hard Drive, or Flash Media.

11.7.4 All copies of electronic media shall be sent to:

Colorado Secretary of State

Attn: Voting Systems Specialist

1700 Broadway – Suite 270

Denver, CO 80290

11.7.5 Jurisdictions will include a point of contact and method of contact (phone, fax, e-mail, etc.) to inform the jurisdiction that the Secretary of State's office has received the election setup records.

11.7.6 Within 24 hours of receipt of the election setup files, the Secretary of State or his or her designee will contact the jurisdiction to confirm receipt of the escrow files.

11.7.7 The Secretary of State's office will store the setup files in a secured, fire proof, limited access location or container.

11.7.8 All parties shall treat as confidential all escrowed materials and any other related information that comes into their possession, control or custody pursuant to this rule.

11.8 Escrow of Voting System Software by Voting System Provider

11.8.1 Voting System Providers must place in escrow a copy of the election software and supporting documentation being certified with either the Secretary of State or an independent escrow agent approved by the Secretary of State. *See* section 1-7-511, C.R.S.

11.8.2 Within ten days of the Voting System provider receiving notification of examination of voting equipment as part of the certification process, the Voting System Provider shall arrange for the completion of escrow requirements as indicated by this rule.

11.8.3 Voting System Provider shall sign a sworn affidavit that the election software in escrow is the same as the election software used in its voting systems in this state. An annual update of the affidavit will be on file in a secured location with the Secretary of State's office.

11.8.4 A complete copy of the certified election software including any and all subsystems of the certified software shall be maintained in escrow.

11.8.5 Any changes to current configurations or new installations must be approved through the certification program of the Secretary of State.

11.8.6 In addition to the requirements listed below, the Voting System Provider must include a cover/instructions sheet for any escrow material to include the Voting System Provider Name, Address and pertinent contact information, Software Version, Hardware Version, Firmware Revision Number and other uniquely identifying numbers of the software submitted for certification.

11.8.7 Election Software Source Code, maintained in escrow, shall contain internal documentation such that a person reasonably proficient in the use of the programming language can efficiently use the documentation to understand the program structure, control techniques, and error processing logic in order to maintain the Source Code should it be removed from escrow for any reason.

11.8.8 System documentation shall include instructions for converting the escrowed Source Code into Object Code, organized and configured to produce an executable system, if warranted.

11.8.9 System documentation shall include technical architecture design, analysis, detail design, testing and an installation and configuration guide.

11.8.10 A set of schematics and drawings on electronic vote casting and counting equipment purchased or in use by the county clerk and recorder shall be on file with the Secretary of State.

11-8-11 All parties shall treat as confidential the terms of this Section including all escrow materials and any other related information that comes into their possession, control or custody pursuant to this section.

11.8.12 Copies of Electronic media and supporting documentation for Escrow within the Secretary of State shall be sent to:

Colorado Secretary of State

Attn: Voting Systems Specialist

1700 Broadway – Suite 270

Denver, CO 80290

11.8.13 Any cost of using an alternative third party escrow agent shall be borne by the Voting System provider.

Rule 12. Rules Concerning Mail Ballot Elections

12.1 Definitions.

12.1.1 A secrecy sleeve or secrecy envelope shall be sealed or closed on at least two sides, one of which shall be the bottom of the sleeve.

12.1.1.1 The secrecy sleeve or secrecy envelope shall be uniform within each type of mail-in ballot or mail ballot voting system used in the State of Colorado. Each secrecy sleeve, secrecy envelope, or voter instructions used in the State of Colorado in any mail ballot or mail-in ballot election shall inform the voter that

additional postage may be required to return a voted ballot and contain the following required language, approved by the Secretary of State, regarding identification requirements of voters who have registered by mail:

(a) "First Time Voters Who Register By Mail"

"If you registered in your county by mail, and did not submit proof of identification in accordance with section 1-2-501, C.R.S., a copy of one of the forms of identification listed in Rule 30.1.6 is required with your mail ballot or your mail-in ballot."

(b) "Failure to provide ID will result in your ballot being treated as a provisional ballot. Provisional ballots are counted when registration is verified." *See* section 1-7.5-107(3.5)(d), C.R.S.

12.1.2 A separate mail ballot plan is not required from a political subdivision if a county clerk and recorder submits a mail ballot plan for a coordinated election which includes the political subdivision.

12.2 Election Judges.

12.2.1 The designated election official for the election may appoint an appropriate number of judges to receive the ballots after they are mailed, to handle "walk-in" balloting and mail-in ballots at the sites designated for "walk-in" balloting, to check registrations, to inspect, verify, and duplicate ballots when necessary, and to count the ballots and certify results.

12.3 Notice of elections.

12.3.1 Call and notice.

(a) Notice of the election is to be sent to the clerk and recorder of the county in which the election is to be held. The notice is to include the date by which the list of registered electors is to be submitted to the political subdivision.

(b) For multi-county political subdivisions, the notice sent to each clerk and recorder shall also include the names of all other counties in which the election will be held.

12.3.2 As soon as possible, but no later than sixty-five (65) days prior to a regular special district election and no later than fifty-five (55) days prior to any other election, a written plan must be submitted to the Secretary of State which includes the following:

(a) Date of the election;

(b) Type and name of jurisdiction involved in the election;

(c) Description of the type of election to be conducted;

(d) Citation of the statute or home rule charter provisions authorizing the election;

(e) Estimated number of eligible electors;

(f) Name of the designated election official who will be responsible for all aspects of the election;

(g) Indication of whether the county clerk and recorder will assist in the election for the entity other than by providing a list of registered electors and other information required by statute;

(h) Total number of "places of deposit". For security reasons, unmonitored freestanding places of deposit located outside will not be allowed;

(i) For elections coordinated by the county clerk and recorder, the total number of walk-in voting locations;

(j) Number of accessible voting machines anticipated being used for walk-in voting locations in elections coordinated by the county clerk and recorder;

(k) Length of time accessible voting machines will be available for walk-in voting in elections coordinated by the county clerk and recorder;

(l) Written timetable for the conduct of the election in accordance with the statute;

(m) Indication of how postage will be handled for ballot packets returned as undeliverable (e.g. "return postage guaranteed");

(n) Indication of procedures to be followed to ensure compliance with statutes and rules, including persons responsible for each stage;

(o) Description of procedures to be used to ensure ballot security at all stages of the process;

(p) Description of procedures for maintaining privacy and security of accessible voting machines to be used in an election coordinated by the county clerk and recorder;

(q) Description of procedures to be used for signature verification;

(r) Description of procedures to ensure privacy by use of a secrecy sleeve or secrecy envelope so receiving judges cannot tell how the elector voted;.

(s) Description of procedures to be used to reconcile ballots issued, ballots received, defective ballots and substitute ballots; and

(t) An actual sample of the secrecy sleeve or secrecy envelope to be used in the mail ballot election.

12.3.3 For elections coordinated by the county clerk and recorder, a security plan shall be submitted in accordance with Rule 43 in addition to the mail ballot plan submitted in accordance with this Rule.

12.3.4 Written timetable specifications:

(a) The designated election official shall prepare a written timetable for conducting the mail ballot election with specific dates or range of dates when each activity is to be completed;

(b) The timetable shall include the following dates:

(1) Copy of written plan to governing body;

(2) Date of approval of election by governing body;

(3) Date of submission of written plan to Secretary of State's office;

(4) Anticipated date of approval by Secretary of State;

(5) Date of publication of notice of election;

(6) Date of notice of election to the county clerk;

(7) Date of notice of election to the county assessor, if property owners are eligible to vote in the election;

(8) Date of close of registration;

(9) Date by which the county clerk and recorder must submit the list of eligible electors to the political subdivision and, if property owners are eligible to vote in the election, the date by which the county assessor must submit the list of property owners;

(10) For elections coordinated by the county clerk and recorder, date notice will be given to voters of walk-in voting and accessible voting options;

(11) Date ballots will be mailed;

(12) Date verification and counting of ballots will begin; and

(13) Date of the election.

12.3.5 A special district required to submit a mail ballot plan in accordance with section 1-7.5-105, C.R.S. and this Rule, may request a seven (7) day filing extension if the plan is being submitted for a regular special district election that may be cancelled.

(a) A request for such extension shall be submitted to the Secretary of State no later than two (2) business days prior to the deadline for submitting the mail ballot plan.

(b) The request shall contain a brief statement of the reasons for such request.

(c) The Secretary of State shall notify the special district of the approval/disapproval of the request within one (1) business day.

12.4 Ballots.

12.4.1 In any election where a multiple page printed ballot is used, a voter must vote and return all pages of the ballot at the same time. Any voter who has returned at least one page of a multiple page printed ballot will be considered to have voted.

12.4.2 For elections where multiple ballots will be included in the same packet or will be sent in separate packets, the ballots and return envelopes shall include distinctive markings or colors to identify political subdivisions when the colors or distinctive markings will aid in the distribution and tabulation of the ballots.

12.4.3 The designated election official for each political subdivision for whom one or more county clerk and recorders are conducting the election shall assure that a complete list of eligible electors in their political subdivision is sent to each appropriate county clerk

and recorder, unless otherwise provided in the intergovernmental agreement. The political subdivision shall list each elector only once to assure that each elector receives one and only one ballot unless otherwise authorized.

12.4.4 For coordinated mail ballot elections, each county clerk and recorder may compare the lists submitted by the various political subdivisions to assure that each elector receives the appropriate ballot or ballots for the election.

12.4.5 For all coordinated elections where more than one mail ballot is being mailed or polling place elections are being held as well as the mail ballot election, the outgoing envelope as well as the instructions or other notice shall have the following notice: "This may not be your only ballot. Other elections may be held by other political subdivisions by mail or by polling place."

12.4.6 If the ballot is returned to the election official as undeliverable, the official shall not be required to re-mail the ballot packet.

12.4.7 The designated election official shall require that the eligible elector submit a copy of his or her identification as defined in Section 1-1-104(19.5), C.R.S., with the elector's ballot in the return envelope if the eligible elector registered to vote by mail pursuant to Part 5, Article 2, Title 1, C.R.S. and did not provide the required ID upon registration.

12.4.8 The county clerk and recorder shall indicate on the list of registered voters requested by the designated election official those registered voters required to be identified in Rule 12.4.6, unless such registered voter either:

(a) Submitted as part of the registration by mail a copy of the elector's identification as defined in Section 1-1-104(19.5), C.R.S.; or

(b) Votes pursuant to Section 1-7-111(2), C.R.S.; or

(c) Is otherwise entitled to vote under any federal law.

12.4.9 If the elector is required to provide his or her identification, the outside of the return envelope shall be marked to identify such envelope.

12.4.10 If the marked return envelope does not contain proper identification, the ballot shall be treated as a provisional ballot. The outside of the return envelope shall be marked "provisional". For non-partisan elections, the provisional ballot shall be verified and counted in accordance with Rule 26.

12.4.11 All return envelopes used in a mail ballot election coordinated by the county clerk and recorder shall be formatted in such a manner that the voter's signature on the back of the envelope is concealed. [Sections 1-7.5-106 and 1-7.5-107, C.R.S.]

a. Any county may apply to the Secretary of State for an exemption to this requirement by submitting a written application based on hardship or other good cause shown.

b. All applications for an exception shall include a statement of the hardship or good cause for which the exception is sought. The Secretary of State shall have ten (10) business days to approve or disapprove an application for such exemption.

12.5 Mail-in and Early Voting.

12.5.1 In a mail ballot election, an elector who will be absent from his or her address of record and requests that a mail ballot be sent to an alternate address, shall be issued a mail ballot in accordance with section 1-7.5-107, except that the return envelope shall contain the affidavit set forth in section 1-8-114, C.R.S.

12.5.2 An "in person" request for a ballot that is delivered to the absent elector in the clerk and recorder's office may be filed any time after January 1 of the year of the election, but no later than the close of business on the Friday prior to the election; except that, if the applicant wishes to receive the ballot by mail, the application shall be filed no later than the close of business on the seventh day before the election.

12.5.3 Upon receipt of a request for a mail-in ballot, the designated election official shall deliver the original ballot or a replacement ballot to that elector.

12.5.4 A record shall be made on the registration rolls that a request for a mail-in ballot was received, a ballot was mailed to the alternate address, and the ballot number shall be recorded.

12.5.5 For mail ballot elections, the notation "Mail-in Ballot No. M.I.V.___" shall not be required on the mail-in ballots.

12.5.6 Establishment of polling place for early voting shall not be required for a mail ballot election, however the location for walk-in balloting shall be maintained.

12.6 Receipt of Ballots

12.6.1 One or more judges shall be appointed for the site to which ballots are to be mailed to receive the ballots as mailed.

12.6.2 Each day when ballots come in, a judge shall count the ballots, batch them and record the number of ballots received.

12.6.3 The ballots shall be date-stamped when received. If any ballot is received after the time set for the closing of the elections, the ballot shall be date-stamped but the ballot shall not be counted.

12.6.4 Records shall also be kept of the number of ballot packets returned as undeliverable.

12.6.5 Ballot packets shall then be placed in a safe, secure place until the counting of the ballots.

12.7 If a voter has been directed to return a document with his/her voted ballot, the election judge shall open the returned envelope to retrieve the required form. If the required form cannot be found in the return envelope, the election judge shall open the secrecy envelope/sleeve to find the required form or document in an effort not to disenfranchise the voter.

12.8 For any non-matching or missing signature on a mail ballot return envelope, Rule 29 concerning procedures for the verification of signatures shall be followed.

12.9 Ballots Delivered in Person.

12.9.1 All "places of deposit" shall be accessible to disabled electors.

12.9.2 All "places of deposit" and any walk-in voting locations shall be located within the political subdivision where feasible. If a political subdivision desires to establish a

"place of deposit" or a site for walk-in voting outside of the county, municipality or district, permission must be obtained from the Secretary of State.

(a) The designated election official shall state the reasons for requesting such exception in the mail ballot plan submitted to the Secretary of State for approval.

(b) The alternate location proposed by the designated election official shall be within reasonable proximity to the political subdivision or the majority of the electors of the political subdivision.

12.9.3 Any eligible elector may deliver in person to the designated or coordinated election official's office no more than 5 voted mail ballots from members of his or her household.

12.10 Replacement Ballots for Purpose of Mail Ballot Elections.

12.10.1 Requests for replacement ballots may be made in writing, by mail, by fax, by email, or by telephone.

12.10.2 An elector requesting a replacement ballot shall complete a sworn statement, as required by section 1-7.5-107(3)(d)(I), C.R.S., on a form provided by the designated election official. If the elector requests that the replacement ballot be mailed, the form may be included in the ballot packet mailed to the eligible elector, and must be received on or before election day by the election official.

12.10.3 The election judge issuing a replacement ballot shall indicate on the outside of the return envelope whether a sworn statement must be returned with the voted ballot. No replacement ballot shall be counted until it has been determined that an affidavit has been completed by the voter and has been received on or before election day by the election official.

12.11 Surrender of Mail Ballot

12.11.1 In an election coordinated by the county clerk and recorder, any voter may surrender a mail ballot to the designated election official and vote in-person on the accessible device provided for the election as required by section 1-5-705 C.R.S.

12.11.2 The election judge receiving the surrendered ballot shall indicate on the outside envelope that the ballot is cancelled. The voter's record shall be updated to give the voter credit for voting in a manner that maintains the secrecy of the ballot.

12.11.3 Any accessible device used in accordance with this rule shall be subject to the privacy, security and accuracy standards set forth in the Election Rules and Title 1, C.R.S.

12.12 Judges Duties.

12.12.1 The judges shall record the results of the election on the judges' certificate and statement.

12.12.2 The judges shall deliver the results of the election to the designated election official along with all election materials.

12.12.3 The judges shall deliver all election materials bound separately as follows:

(a) Ballots which were counted;

(b) Ballots which were defective, as defined in 1-7-309(4);

(c) Additional ballot pages returned after the voter cast his/her ballot that were appropriately marked and not counted in accordance with rule 12.4.1;

(d) Ballots/ return envelopes which may be challenged;

(e) Return envelopes with ballots removed;

(f) Defective return envelopes with ballots inside;

(g) Ballot packets which were returned as undeliverable.

12.13 Canvass of votes/certificates of election.

12.13.1 Elections can be challenged as provided in the enabling statute of the entity calling the election.

12.13.2 The failure of an elector to receive a ballot will not by itself be sufficient grounds for the challenge of an election, so long as the designated election official acted in substantial compliance with Title 1, Article 7.5, C.R.S. or the rules promulgated thereunder by the Secretary of State.

Rule 13. Rules Concerning Mail-in Voting

13.1 All election materials prepared by the designated election official, including the Article X, Section 20 notice, may be included in the mail-in ballot packet.

13.2 The county clerk and recorder shall keep a list, to the extent possible, of the names and mailing addresses of all individuals who deliver more than five (5) voted mail-in ballots to the designated or coordinated election official's office or the designated drop site for mail-in ballots.

13.3 The county clerk and recorder shall notify each individual on the list required by 13.2 by letter that they have violated section 1-8-113, C.R.S., by delivering more than five (5) mail-in ballots to the designated election official.

13.4 The designated election official shall require that the eligible elector submit a copy of his or her identification as defined in section 1-1-104(19.5), C.R.S., with the elector's ballot in the return envelope if the eligible elector registered to vote by mail pursuant to Part 5, Article 2, Title 1, C.R.S., and failed to include the copy with the original registration or failed to supply a driver's license number, Colorado Department of Revenue ID number or at least the last four digits of a social security number that was subsequently verified per Rule 30.3.

13.5 The county clerk and recorder shall indicate on the list of registered voters requested by the designated election official those registered voters required to be identified in Rule 13.4.

13.6 In any election where a multiple page printed ballot is used, a voter must vote and return all pages of the ballot at the same time. Any voter who has returned at least one page of a multiple page printed ballot will be considered to have voted. Any additional page returned at a later time shall not be counted but shall be appropriately marked, set aside, and preserved as other election materials in accordance with section 1-7-802, C.R.S.

13.7 If the elector is required to provide his or her identification, the outside of the return envelope shall

be marked to identify such envelope. A county may use additional methods to communicate the requirement to provide identification. The elector shall also be provided with specific instructions on the requirement to provide such identification.

13.8 If the marked return envelope does not contain proper identification, the ballot shall be treated as a provisional ballot. The outside of the return envelope shall be marked "provisional". The provisional ballot shall be verified and counted in accordance with section 1-8.5-105(5), C.R.S.

13.9 If a voter has been directed to return a document with his or her voted ballot, the election judge shall open the returned envelope to retrieve the required form. If the required form cannot be found in the return envelope, the election judge shall open the secrecy envelope/sleeve to find the required form or document in an effort to not disenfranchise the voter.

13.10 For any non-matching or missing signatures on a mail-in ballot return envelope, Rule 29 concerning procedures for the verification of signatures shall be followed.

13.11 The designated election official's duties under section 1-8-112, C.R.S., are triggered if the U.S. mail is delivered collectively to the residential facility. If the U.S. mail is delivered to individuals or individual mailboxes, the requirements of section 1-8-112, C.R.S., shall not be applicable.

13.12 Voters who appear in person at their correct polling place, but who requested mail-in ballots, will nevertheless be permitted to cast provisional ballots upon their declaration that they have not and will not cast any vote in the election other than by that provisional ballot. The provisional ballot is then to be counted, once election officials determine that the voter did not in fact cast the mail-in ballot.

13.13 Permanent Mail-in Voting. An application for a mail-in ballot received by the county clerk and recorder shall be treated as an application for permanent mail-in ballot only if the applicant makes such designation. If the applicant does not specify the length of the request for a mail-in ballot, the application shall be treated as an application for the current calendar year. If the applicant marks both the permanent and calendar year boxes, the application shall be treated as an application for permanent mail-in ballot.

13.14 A county clerk and recorder using the "Ballot Now" system to print mail-in ballots shall print and make ballots available no later than thirty-two (32) days preceding the election in accordance with section 1-5-403, C.R.S. Ballot issuance shall begin no later than seventy-two (72) hours after printing is complete in accordance with 1-8-111, C.R.S.

13.15 A county clerk and recorder who utilizes a third party vendor to mail ballots shall be considered to be in possession of the ballots for the purposes of sections 1-5-403 and 1-8-111, C.R.S., when the vendor has prepared the ballots for mailing, but no later than thirty-two (32) days preceding the election in accordance with section 1-5-403, C.R.S.

13.16 In addition to the language required by section 1-8-101(4)(a), C.R.S., the secrecy sleeve and instructions shall contain a statement that "All valid mail-in ballots are counted in every election in Colorado, regardless of the outcome or closeness of any race."

13.17 All return mail-in ballot envelopes used in an election coordinated by the county clerk and recorder shall be formatted in such a manner that the voter's signature on the back of the envelope is concealed.

13.17.1 Any county may apply to the Secretary of State for an exemption to this requirement by submitting a written application based on hardship or other good cause shown.

13.17.2 All applications for an exception shall include a statement of the hardship or good

cause for which the exception is sought. The Secretary of State shall have ten (10) business days to approve or disapprove an application for such exemption.

Rule 14. Rules Concerning Recount

14.1 Each designated election official who conducts a recount shall follow the specific procedures outlined by the Secretary of State for the equipment used for the election.

14.2 The Secretary of State shall prepare a letter that specifies the procedures to be used for the recount which shall be sent to the designated election official upon receipt of the notice of a recount.

14.3 The purpose of a recount is to review the ballots to assure they were counted properly. Unless directed otherwise by the Secretary of State, all procedures of election night shall be followed as closely as possible during the recount, including an examination of the ballots.

14.4 General Provisions

14.4.1 The Secretary of State may have an official observer at every recount location.

14.4.2 Any candidate who is subject to the recount may be present and observe the recount at any recount location or designate one Watcher to observe the recount at any recount location. Watchers must provide the election official with a certificate signed by the candidate, except that an officer of the county party may be accepted as a candidate's watcher without a certificate if no other person is designated by the candidate for that location.

14.4.3 Each candidate, his or her watcher, members of the media, and official observers as defined in Rule 8.1, may be present in the room when a recount is conducted. During the recount the candidate, watcher, members of the media, and official observers may not interfere with the recount process.

14.4.4 The recount board-, candidates, watchers, members of the media, and official observers will take an oath.

14.4.5 Candidates, watchers, members of the media, and official observers who enter the recount room after the recount begins must stay until the recount is complete. Anyone who must leave the recount room will not be allowed to re-enter the recount room without the specific consent or authorization of the designated election official.

14.4.6 All votes for all candidates in any race subject to a recount shall be counted.

14.5 Counting of Paper Ballots - Recount

14.5.1 Totals of recounted ballots shall be processed, counted, and reported in summary form as follows:

(a) Sum total of votes cast for each candidate, under-votes, and over-votes for all precincts;

(b) Sum total of votes cast for each candidate, under-votes, and over-votes for all mail-in ballots (a combined total, not totaled by individual precincts or locations, unless the voting system so allows.);

(c) Sum total of votes cast for each candidate, under-votes, and over-votes for all early voting precincts (a combined total, not totaled by individual precinct or locations, unless the voting system so allows.);

(d) Determine grand total of ballots cast by early voting, mail-in voting, and precinct voting.

14.5.2 If mail-in ballots were originally counted with early voting ballots, then the recount will be of a combined total of early and mail-in ballots.

14.5.3 Ballot boxes or containers shall be opened one at a time.

14.5.4 Ballots shall be counted into groups of 25 to ensure that the number of ballots recounted matches the number originally counted.

14.5.5 Votes shall be counted by individual hash marks in 25-count sections by two different judges.

14.6 Counting of Ballots - Recount

14.6.1 All voting equipment to be used in the recount must be tested prior to the recount, utilizing the procedures set forth in this section. Prior to the recount, the canvass board shall choose at random and test Voting Devices and precinct(s) to be utilized as a test deck for purposes of section 1-10.5-102. The purpose of a test deck is to assure the tabulation machines are counting properly. The devices chosen shall contain at least five (5) ballots cast. A hand tally shall be conducted of the selected devices pursuant to section 1-10.5-102(3)(a). The totals of the recounted contest obtained from the test devices and precinct(s) reports from close of polls shall be compared to the hand-tallied total.

14.6.2 The canvass board shall choose at random five percent (5%) of voting devices containing votes from the election, which are affected by the recount, for the test.

(a) Prior to the start of the test, the canvass board shall verify that devices randomly chosen were not used in the audit conducted pursuant to section 1-7-514 (1)(b).

(b) The proportion of Optical Scan devices to DRE/electronic voting devices selected for the test shall match the proportion of machines used in the election by the designated election official.

(c) At least one device selected for the test shall be a central count/mail-in ballot scanner.

14.6.3 For testing central count/mail-in scanners the canvass board shall randomly select one percent (1%) or fifty (50) ballots, whichever is greatest. A blank prom cartridge, rom cartridge or memory card shall be utilized for the test. The ballots selected shall be processed through the central count/mail-in scanner and compared to the hand-tallied total.

14.6.4 If the test deck totals differ from the hand count totals, and the discrepancy cannot be accounted for by voter error, all ballots containing the recounted contest shall be tallied by hand following procedures for paper ballot recounts. If the test deck totals are exactly the same, the recount tabulation shall be conducted in the same manner as the original ballot count in accordance with section 1-10.5-102(3)(b).

14.6.5 A clear audit trail shall be maintained throughout the recount including, but not limited to, a log of seal numbers on transfer cases or ballot boxes as defined in section 1-7-505, C.R.S., and the corresponding numbered seal used as a replacement for the original seal, upon completion of the recount of ballots within that transfer case or ballot box.

14.6.6 The number of ballots counted by a precinct according to the election night report shall be available during the recount for comparison purposes.

14.6.7 Totals of recounted ballots shall be processed, counted, and reported in summary form as follows:

(a) Sum total of votes cast for each candidate, ballot issue or ballot question subject to the recount, under-votes, and over-votes for all precincts;

(b) Sum total of votes cast for each candidate, ballot issue or ballot question subject to the recount, under-votes and over-votes for all mail-in ballots (a combined total, not totaled by individual precincts or location, unless your system allows);

(c) Sum total of votes cast for each candidate, ballot issue or ballot question, subject to the recount, under-votes, and over-votes for all early voting locations (a combined total, not totaled by individual precinct or locations, unless the voting system so allows);

(d) Determine the grand total of ballots cast in early, mail-in, and precinct voting.

14.6.8 If mail-in ballots were originally counted with early voting ballots, then the recount will be of a combined total of early and mail-in ballots.

14.6.9 Ballots shall be reviewed for voter intent.

14.6.10 Utilizing one or more blank prom cartridge, rom cartridges, or memory card, all precinct ballots shall be counted within all precincts. After the individual precinct is counted, the ballots shall be returned to the ballot container and sealed.

14.6.11 Utilizing one or more blank prom cartridge, rom cartridges, or memory card, all early voting ballots shall be counted. After an individual ballot container is counted, the ballots shall be returned to the ballot container and sealed.

14.6.12 Utilizing one or more blank prom cartridges, rom cartridges, or memory card, all mail-in ballots shall be counted. After an individual ballot container is counted, the ballots shall be returned to the ballot container and sealed.

14.7 Counting of Ballots Using the “Ballot Now” Voting System

14.7.1 In the case of a recount, the designated election official shall identify all precincts with the contest(s) designated for a recount using the following procedures:

(a) Using the Ballot Now Scanned Ballots by Precinct report from the original election database, locate the batches containing any ballot type (Election, Mail-in, and Provisional) for the recount.

(b) Remove ballots from each batch and label them as “Recount”.

14.7.2 Required scanner testing shall be performed using a test deck from at least three (3)

randomly chosen precinct(s) with at least 150 ballots total as prescribed by statute, following testing procedures outlined in the State of Colorado Procedures for the use of the Ballot Now Voting System. A Recount Test spreadsheet shall be created based on the chosen precinct in the same fashion as the ballot options test spreadsheet.

14.7.3 Ballots for the recount shall be processed following the State of Colorado Procedures for the use of the Ballot Now Voting System in conjunction with the following procedures:

(a) Open Ballot Now with an unused MBB (Mobile Ballot Box) from the election and create a Ballot Now recount database;

(b) Scan and resolve all recount ballots following original election procedures, including the examination of ballots (Rule 14.3; section 1-8-10.5-102, C.R.S.) Use the Audit Trail Report and original Scan Batch Reports with notes to ensure resolution action follows original resolution.

(c) Save all recount CVRs (Cast Vote Records) to the MBB (Mobile Ballot Box) after verifying that the number of ballots processed matches the number of ballots cast in the recount contest(s).

(d) Open a new recount election in "Tally" and process the recount MBB following the tabulation procedures above.

(e) Compare recount results to original results and document any differences.

(f) Backup the test database and the official recount database following the "Archive" procedures.

Rule 15. Rules Concerning Preparation Filing, and Verification of Statewide Initiative Petitions

15.1 Each petition shall be verified according to the procedures set forth in Rule 7.1.

15.2 No petition shall be accepted which lists proponents other than the two identified as petition representatives pursuant to section 1-40-104, C.R.S.

15.3 Proponents may begin circulating a petition for signatures at any time after the final decision of the title board, including disposition of any motion for rehearing or the expiration of the time for filing a motion for rehearing, and after the Secretary of State has approved the format of the petition as provided in section 1-40-113 (1), C.R.S., whether or not an appeal is filed with the Supreme Court pursuant to section 1-40-107 (2). The six-month period specified in section 1-40-108 (1) shall begin on the date that the first signature is affixed to the petition or, in the case of an appeal to the Supreme Court, on the date that the decision of the Supreme Court becomes final, whichever date occurs first. Signatures shall be counted only if affixed to the petition during the period provided in this rule.

15.4 Only one filing of a petition or an addendum is allowed. After a petition or an addendum is filed, the petition or the addendum may not be supplemented with additional signatures. If additional signatures are submitted after the original filing, such signatures shall not be counted, even if such signatures are submitted within the time permitted by law for the filing of the original petition or addendum.

15.5 Verification by Random Sample

15.5.1 Each petition section shall be verified according to the procedures set forth in Rule 17.1.

15.5.2 Preliminary count and generation of random numbers.

a. After the entries have been counted for each petition section, a data entry clerk shall enter the following data into the database; the petition identification number, the petition section number, the page number and the number of entries on the page.

b. A record shall then be created for each entry, which record shall contain the petition identification number, petition section number, page number and the entry number. The total number of entries submitted for the petition shall be tallied.

c. If the number of entries is less than the total number of signatures required to certify the measure to the ballot, a statement of insufficiency shall be issued.

d. A series of random numbers shall be generated by the database which is the greater of four thousand (4,000) signatures or five percent (5%) of the total number of entries.

15.5.3 Verification of Selected Entries

a. The random numbers selected shall be matched with the appropriate petition section, page number, and entry number.

b. Each entry generated shall be checked for validity in accordance with Rule 17.1.

c. Each reason for rejection of an entry shall be recorded by separate code and a master record of the rejected entries shall be maintained. A master record shall also be maintained of each entry that is accepted.

15.5.4 Checking the circulator's affidavit. The circulator's affidavit shall be checked for each entry in accordance with Rule 17.2. If the affidavit is not attached and completed, all entries in the section shall be rejected.

15.5.5 Checking individual signatures. Each individual signature shall be checked in accordance with Rule 17.3.

15.5.6 Computation of total accepted signatures.

a. A tally shall be made of the number of accepted signatures and the number of rejected signatures.

b. The Secretary of State shall determine the range of signatures by multiplying the constitutionally required number of signatures by 0.90 to compute ninety percent (90%) of the required signatures and by 1.10 to compute one hundred and ten percent (110%) of the required signatures. This number shall be calculated after the general election at which the Secretary of State was elected.

c. After completing a petition, the number of signatures checked shall then be divided into the number of accepted signatures. This number will be the percentage of accepted signatures which were submitted.

d. The percentage calculated in paragraph c of this Rule 15.5.6 shall then be multiplied by the total number of entries which were previously tallied. This number will be the number of presumed valid signatures which were submitted.

e. If the number generated is ninety percent (90%) or less of the constitutionally required number of signatures as calculated in paragraph b of this Rule 15.5.6, then the Secretary of State shall issue a statement of insufficiency. If the number generated is one hundred and ten percent (110%) or more of the constitutionally required number, then the Secretary of State shall issue a statement of sufficiency.

f. If the number generated is more than ninety percent (90%) but less than one hundred and ten percent (110%) of the required number, the Secretary of State shall order that each signature on the petition be verified to determine whether the issue or question should be certified to the ballot.

Rule 16. Rules Concerning Verification by Random Sample of Statewide Initiative Petitions - Repealed

Rule 17. General Rules Concerning Verification of Petitions

17.1 General procedures concerning verification of petitions.

17.1.1 No petition shall be accepted which lists proponents other than those authorized by law.

17.1.2 When the petitions are received, each section shall be date-stamped and consecutively numbered with a four digit number. The number may be printed by a printer, hand-stamped with a manual stamp, or handwritten.

17.1.3 Each petition shall be either an individual sheet for signatures or multiple sheets that are stapled together.

17.1.4 Each section shall be checked for evidence of disassembly. If it appears that the section was disassembled, all entries in the section shall be rejected.

17.1.5 The lines on each petition section shall be consecutively numbered. The block of information which consists of the printed last name, first name, middle initial, county, signing date, street address, city, and signature is considered a line.

17.1.6 If the number of entries is less than the total number of signatures required to certify the measure to the ballot, a statement of insufficiency shall be issued.

17.1.7 Each line with writing shall be counted on each petition and shall be considered an entry. The number of entries for each page of the section shall be written on the page and the total entries for the section shall be written on the face of the petition section.

a. A line that has no writing or marks on it shall not be considered an entry.

b. A line that has writing on it but is completely crossed out shall not be considered an entry.

c. A line which has writing on it but is incomplete or on its face contains an invalid signature or which is partially crossed out shall be considered an entry to be included in this count.

17.2 Checking the circulator's affidavit.

17.2.1 The circulator's affidavit shall be checked for each entry. If the affidavit is not attached and completed, all entries in the section shall be rejected.

17.2.2 The notary clause at the end of the affidavit shall be checked for each entry. If any information is missing, or if the date on the notary clause is not the same date as the circulator signed the affidavit, all entries in the section shall be rejected.

17.2.3 The circulator's affidavit shall be checked to assure it has been completed in accordance with the statutory requirements listed below. If the affidavit was not completed in accordance with the requirements listed below, all entries in the section shall be rejected.

a. For candidate petitions, the circulator's affidavit shall be completed in accordance with section 1-4-905(1) and (2), C.R.S.

b. For initiative petitions, the circulator's affidavit shall be completed in accordance with section 1-40-111(2), C.R.S.

17.3 Checking individual signatures.

17.3.1 Each individual entry shall be checked against the master voter registration files to assure that the elector was an eligible elector in the political subdivision at the time the petition was signed.

17.3.2 Each reason for rejection of an entry shall be recorded by separate code and a master record of the rejected entries shall be maintained. A master record shall also be maintained of each entry that is accepted.

17.3.3 If the information on the current voter registration file does not match the information on the entry, the elector's voter registration history shall be checked to determine if the information on the entry matches the voter registration file at the time the entry was signed.

17.3.4 Name of eligible elector. To be accepted, the name on the entry must be in a form similar to that found on the voter registration record. Signatures that are common variants of the name found on the voter record shall be counted. If the signer of the petition is not found on the voter registration file, or if applicable, the county assessors' list, the entry shall be rejected.

17.3.5 Middle initial and additional terms.

a. If the middle initial or middle name is not part of either the signature line or the voter record but is included on the other document, if the first and last name are the same on both documents, the entry shall be accepted.

b. If the middle initial or middle name on the signature line is different than the middle initial or middle name on the voter record, the entry shall be rejected.

c. If an indicator such as Jr., Sr., or II is present or omitted from the petition or the

voter record, the entry shall be accepted. If two persons with the same name reside at the same address as found on the master voter list, the entry shall be rejected, unless the identity of the signer can be conclusively determined.

17.3.6 Address of eligible elector.

a. If the address written on the line does not match the address on the voter record or on the voter history for the date when the signature was taken, the entry shall be rejected.

b. If the address on the petition either includes or omits a letter or number identifying an apartment or the directional location of a street, such as “E” for east, “SW” for southwest, etc., the entry shall be accepted.

c. If the signer gave a post office box for the address, the entry shall be rejected.

17.3.7 Incomplete information. If the line of the petition is incomplete, with at least one piece of information omitted, the entry shall be rejected.

17.3.8 Date of signing.

a. If a signature is placed on the petition prior to the final approval of the petition format by the designated election official, the entry shall be rejected.

b. If the signer was not an eligible elector in the political subdivision at the time of signing, the entry shall be rejected.

c. If a signature is placed on the petition after the date on the circulator’s affidavit, the entry shall be rejected.

17.3.9 Assistance to signer. If assistance appears to have been given to the signer and a statement of assistance does not accompany the signature or mark explaining the variance in the script, the entry shall be rejected.

17.3.10 Illegible signature. If the signature and printed name are illegible so that the voter record cannot be verified, the entry shall be rejected.

17.3.11 Duplicate signature. If the elector has previously signed the same petition, the first valid entry shall be counted and all other entries shall be rejected.

17.3.12 Where an elector may sign more than one petition, the first signature(s) filed up to the maximum allowed, shall be the ones that are counted.

17.4 Final Tally. After all of the sections have been checked, a final tally of all valid signatures shall be prepared and the statement of sufficiency or insufficiency issued.

Rule 18. Rules Concerning Statement of Sufficiency for Petitions

18.1 Within the time required by statute, the designated election official shall issue a statement of sufficiency or insufficiency.

18.2 The statement shall contain the name of the petition, the proponents, and the date the petition was submitted for verification.

18.3 The statement shall indicate the total number of entries, the total number of entries accepted, and the total number of entries rejected.

18.4 The statement shall indicate whether an insufficient number of entries were submitted, the number of presumed valid signatures if a random sample was conducted, and the number of valid signatures counted if every entry was counted.

18.5 Records. The designated election official shall assure that a record of all signatures rejected and the reasons for each rejection be maintained as public records.

Rule 19. Rules Concerning Cure for Statewide Petitions

19.1 Cure of petitions deemed insufficient.

19.2 If the proponents submit additional signatures within the permitted time, all signatures submitted in the addendum shall be checked using the process delineated in Rule 16 and Rule 17.

19.3 If the number of valid signatures in the addendum when added to the number of valid signatures given in the statement of insufficiency equals 110% or more of the required signatures, a statement of sufficiency shall be issued.

19.4 If the number of valid signatures in the addendum when added to the number of valid signatures given in the statement of insufficiency equals more than 90% but less than 110% of the required signatures and the initial check was by random sample, all of the previously submitted entries shall be checked. The total of valid signatures in the original petition shall then be added to the number of valid signatures submitted in the addendum.

19.5 If the initial check was of every entry, then the total of valid signatures shall be added to the number of valid signatures submitted in the addendum.

19.6 The designated election official shall then issue a new statement of insufficiency or sufficiency which reports the total number of valid signatures submitted.

Rule 20. Rules Concerning Protests

20.1 A protest shall specifically state the reasons for the challenge to the determination of sufficiency or insufficiency.

20.1.1 A protest that alleges specific statutes or rules were improperly applied shall clearly state the specific requirements that were improperly applied.

20.1.2 A protest that alleges that entries were improperly accepted or rejected shall clearly identify the specific individual entries at issue and the reason the entries were improperly accepted or rejected.

20.2 The protest shall be deemed insufficient for each entry or class of entries challenged where the individual entry is not listed or the reason for the challenge is not given.

20.3 Where a petition verified by random sample is protested, proponents and opponents may protest the process by which the numbers used in the calculations were generated.

Rule 21. Rules Concerning Ballot Issue Elections

21.1 Placing measures on the ballot for coordinated odd-year elections.

21.1.1 For statewide elections, the Secretary of State shall be responsible for determining whether the proposed initiative concerns state matters arising under Section 20 of Article X of the State Constitution and is eligible to appear on the ballot at an odd-year election.

21.1.2 For elections concerning counties or other political subdivisions, if the election is held as a coordinated election, each political subdivision shall determine whether the proposed initiative or referred measure is a local government matter arising under Section 20 of Article X of the State Constitution.

21.2 Written comments concerning ballot issues submitted to the designated election official for the political subdivision shall not be withdrawn after the end of the business day on the last Friday immediately preceding the forty-fifth day before the election.

Rule 22. Rules Concerning Checking Candidate and Issue Petitions – Repealed

Rule 23. Rules Concerning Referendum Petitions. Sections 1-40-132 and 1-1-107(2)(a), C.R.S.

23.1 Applicability. This Rule 23 applies to statewide referendum petitions pursuant to Article V, Section 1 (3) of the Colorado Constitution.

23.2 Relationship to statutory and constitutional provisions.

23.2.1 The purpose of this Rule 23 is to administer and interpret, but not supersede, the provisions of Article V, Section 1, Colorado Constitution, and Article 40 of Title 1, Colorado Revised Statutes which apply to referendum petitions.

23.2.2 Where there is an irreconcilable conflict between this Rule 23 and any such statutory or constitutional provision, then such statutory or constitutional provision prevails.

23.3 Applicability of initiative statutes.

23.3.1 Except where this Rule 23 otherwise provides, or where the context otherwise requires, any statutory or constitutional provision that applies specifically to initiative petitions shall also apply to referendum petitions.

23.3.2 The following procedural steps that apply to initiative petitions do not apply to referendum petitions:

(a) Review and comment by legislative staff on the text of proposed initiated constitutional amendments and initiated laws, pursuant to Article V, Section 1 (5), Colorado Constitution, and section 1-40-105, C.R.S.

(b) Title-setting by the title setting review board established in section 1-40-106, C.R.S.

23.4 Approval of referendum petition form.

23.4.1 No referendum petition shall be printed, published, or otherwise circulated unless the form and the master original to be used for printing or reproduction have been approved by the Secretary of State. Section 1-40-113(1), C.R.S.

23.4.2 A referendum petition may be submitted to the Secretary of State for approval at any time after the bill has been presented to the governor for approval or disapproval. The Secretary of State shall not issue final approval of the referendum petition form until the bill has become law pursuant to Article IV, Section 11 of the Colorado Constitution.

23.4.3 Each referendum petition section shall consist of the following, in the order listed: Sections 1-40-113(1), and 1-40-102(6), C.R.S.

(a) The warning as specified in Section 1-40-110, C.R.S.

(b) The heading "Referendum Petition", followed by the demand upon the Secretary of State in substantially the following form, in which the underlined material is only for example:

"To: The Honorable _____, Secretary of State of the State of Colorado

We, the undersigned electors of the State of Colorado, do hereby respectfully petition, order, and demand that Sections 1 to 12, inclusive (being the entire Act), of House Bill No. 02-1010, by Representatives Abel, Baker, and Cain, and Senators Smith, Thomas, and Jones, entitled "Concerning registration requirements for motor vehicles, and, in connection therewith, authorizing two- and five-year registration periods and authorizing discretionary vehicle identification number inspections, and making an appropriation", passed by the Sixty-third General Assembly of the State of Colorado, at its regular session in the year 2002,shall be submitted to the voters for their adoption or rejection at the next biennial regular general election, to be held on Tuesday, the 5th day of November, 2002, and each of the signers of this petition says:

I sign this petition in my own proper person only, and I am a registered elector of the State of Colorado, my residence address and the date of my signing this petition are correctly written immediately after my name, and I do hereby designate the following persons to represent me in all matters affecting this petition:"

(c) The name and mailing address of two persons who are designated to represent the signers thereof in all matters affecting the same.

(d) The ballot title and submission clause in the form required by this Rule 23.

(e) The text of the Act, or the item(s), section(s), or part(s) of the Act, on which the referendum is demanded. *See* sections 1-40-110; 1-40-102(6).

(f) Succeeding pages that each contain the warning, the ballot title, and submission clause, and ruled lines numbered consecutively for electors' signatures.

(g) A final page that contains the circulator's affidavit required by section 1-40-111(2), C.R.S.

23.4.4 Each referendum petition section shall include only the matters required by Article 40, Title 1, C.R.S., and this Rule 23, and no extraneous material. Section 1-40-113(1), C.R.S.

23.5 Ballot Title and Submission Clause.

23.5.1 The ballot title shall consist of the title of the act on which the referendum is demanded, followed by the bill number, in substantially the following form, in which the underlined material is only for example:

"An Act concerning registration requirements for motor vehicles, and, in connection therewith, authorizing two- and five-year registration periods and authorizing discretionary vehicle identification number inspections, and making an appropriation, being House Bill No. 02-1010."

23.5.2 When referendum is demanded on less than an entire Act of the General Assembly, the ballot title and submission clause shall consist of the ballot title preceded by words in substantially the following form, in which the underscored material is only for example, and ending in a question mark:

"Shall Section 3 (concerning definition of terms) and Section 4 (eliminating licensing requirements for motor vehicle dealers) of the following Act of the General Assembly be approved:" The material in parentheses shall correctly and fairly summarize the subject or the effect of the portion of the Act referenced.

23.6 Election. If a referendum petition is timely filed with the Secretary of State with a sufficient number of valid signatures, it shall be voted upon at the next general election that occurs at least three months after the referendum petition is filed with the Secretary of State.

Rule 24. Rules concerning Congressional Term Limits Declaration

24.1 The Secretary of State shall make available to every candidate for United States House of Representatives or the United States Senate the Congressional Term Limits Declaration provided in Article XVIII, Section 12a of the Colorado Constitution. The Secretary of State will offer the Congressional Term Limits Declaration to every such candidate when the candidate files his or her candidate affidavit with the Secretary of State. Any failure of the Secretary of State to offer the Congressional Term Limits Declaration to a candidate shall have no effect on such candidate's candidacy.

24.2 Part A of the Term Limits Declaration shall be accepted by the Secretary of State if Part B of the Term Limits Declaration has not been duly executed and submitted. Art. XVIII, sec. 12a (7)

24.3 In the case of a candidate who has qualified as a candidate for a term that would exceed the number of terms set forth in Term Limits Declaration One, the Secretary of State shall not place the words, "Signed declaration to limit service to [3 terms] [2 terms]" after the candidate's name, even if the candidate has executed and submitted Parts A and B of Term Limits Declaration One.

Rule 25. Rules Concerning Uniformed and Overseas Citizens' Absentee Voting Act ("UOCAVA")

25.1 UOCAVA Fax Ballot Rules:

25.1.1 U.S. citizens who are absent from the state and who are members of the Uniformed Services as defined as the U.S. Armed Forces (Army, Navy, Marines, Air Force, and Coast Guard), Merchant Marine, and their spouses or dependants, resident overseas electors, or nonresident overseas electors who are otherwise qualified to apply for and vote by mail-in ballot, ("UOCAVA citizens"), may request a mail-in ballot by facsimile transmission.

25.1.2 A designated election official may send and receive mail-in ballot applications by facsimile transmission, send blank ballots and accept voted ballots by facsimile transmission from eligible electors who are UOCAVA citizens absent from the state and who are otherwise qualified to vote by mail-in ballot.

25.1.3 The office of each county clerk and recorder shall have a dedicated fax machine located in their office in order to send and receive faxed ballots to and from UOCAVA citizens in accordance with the Help America Vote Act of 2002 and this Rule 25.

25.1.4 On the faxed application, the elector shall provide the fax number, including the international country code and local area, province or city code (if applicable), where the ballot shall be faxed.

25.1.5 A mail-in ballot that is completed and returned by the elector via facsimile transmission must contain the elector's printed name, signature, date of birth, and the following statement: "I am a member of the Uniformed Services, a member of the Merchant Marine, spouse/dependant of a Uniformed Services Member or Merchant Marine, resident overseas elector or a nonresident overseas elector and am qualified to apply for and vote by mail-in ballot. I also understand that by faxing my voted ballot, I am voluntarily waiving my right to a secret ballot."

25.2 Limited Electronic Mail Ballot Rules

25.2.1 A uniformed services elector serving outside the United States may receive and return an application for, or a mail-in ballot by electronic mail in circumstances where a mail ballot or fax ballot is not available or feasible.

(a) An application for an electronic mail ballot must be received no later than close of business the Friday immediately preceding the election

(b) An email request for a replacement ballot must be received by 5:00 p.m. Mountain Time on election day.

25.2.2 Upon receipt and verification of an application, the designated election official shall authorize the transmission of a blank ballot containing all contests and questions for which the elector is eligible to vote.

(a) The designated election official shall fax the election materials, which shall include a blank ballot and voter instructions (including the elector affidavit) to the Federal Voting Assistance Program (FVAP) Electronic Transmission Service (ETS). The designated election official shall not send the voting materials directly to the elector by electronic mail. Or,

(b) The designated election official may store the ballot electronically with ETS using the procedures outlined in the FVAP ETS Guide, and authorize the transmission of the blank ballot and instructions (including the elector affidavit) to the elector by faxing a completed electronic transmission coversheet to ETS.

25.2.3 The electronic package transmitted to ETS shall contain:

(a) A completed electronic transmission coversheet;

(b) The blank ballot, if not stored with ETS, with voting instructions (including the elector affidavit); and

(c) The contact information for the designated election official including: name, title, mailing address, email address, phone, and fax number.

25.2.4 A ballot that is completed and returned by the elector via electronic mail must contain the elector's printed name, signature, date of birth, and the following statement: "I am a member of the Uniformed Services and am qualified to apply for and vote by mail-in ballot. I also understand that by transmitting my voted ballot by electronic mail, I am voluntarily waiving my right to a secret ballot."

25.2.5 To return a voted ballot and affidavit by electronic mail, the elector must have access to the technology to scan the documents, save the documents in a secure format, and return the documents as an electronic mail attachment.

25.2.6 Upon receipt of the voted ballot, the designated election official shall verify the elector's signature pursuant to section 1-8-114.5, C.R.S. and Rule 29. Upon verification of the elector's signature, the ballot shall be duplicated pursuant to 1-8-103.5(2) C.R.S. and processed.

25.3 Overall UOCAVA Requirements

25.3.1 If the designated election official has mailed a Clarification for Voter Status Memorandum to an elector in response to receiving mail-in ballot request and has not received a response to the memo at the time the mail-in ballot packet is prepared, the designated election official shall mail the elector a full ballot for which the elector, as a resident, would be eligible to vote (federal, state, local offices, and questions).

25.3.2 Mail-in ballots sent by ETS or facsimile transmission shall be in text format on 8 ½" x 11" white paper to increase the readability of the ballot and to avoid possible misinterpretations of the elector's intended choice because of poor transmission of the document.

25.3.3 Instructions sent by ETS or faxed to the elector with the blank ballot shall be in text format on 8 ½" x 11" white paper and shall include the following information:

(a) The dedicated fax number or email address for ETS to which the voted ballot shall be returned (if applicable);

(b) The total number of pages transmitted;

(c) The total number of ballot pages;

(d) The telephone number or e-mail address where the eligible elector may send questions regarding the ballot;

(e) A notice that the ballot shall not be duplicated for any other elector;

(f) A notice that once the ballot is returned by an elector, it will be counted pursuant to section 1-8-116(4), C.R.S.; however, if an elector requests a replacement

ballot, the first ballot returned will be counted pursuant to section 1-8-111(3), C.R.S.;

(g) A notice that the voted ballot must be received by the clerk and recorder or Secretary of State no later than 7:00 p.m. Mountain Time on election day;

(h) A request for an e-mail address to which a confirmation notice of receipt of the ballot may be sent at the discretion of the county clerk and recorder; and

(i) Any other information deemed necessary by the Secretary of State or the designated election official.

25.3.4 The designated election official shall fax a blank ballot with the instructions to the fax number provided by the elector, or to ETS (if applicable). If the transmission is unsuccessful, the designated election official shall attempt to fax the ballot at least two more times.

25.3.5 Mail-in ballot applications returned via facsimile transmission or electronic mail by the elector to the county clerk and recorder or the Secretary of State via ETS shall be received in the clerk and recorder's office or the Secretary of State's office no later than the close of business on the Friday immediately preceding the election.

25.3.6 Any voted ballot by a Uniformed Services elector or an overseas elector received by the office of the Secretary of State by 7:00 p.m. Mountain Time on election day shall be forwarded to the appropriate county clerk and recorder by overnight mail, fax, or courier no later than the next business day. The office of the Secretary of State shall immediately notify the appropriate county clerk and recorder of the receipt and forwarding of the ballot.

25.3.6.1 If a county is notified by the Secretary of State by 7:00 p.m. on election day that a mail-in ballot has been received by the office of the Secretary of State, the clerk and recorder shall retain a minimum of ten (10) voted ballots, which shall be counted with the ballot received by the Secretary of State to ensure voter secrecy.

25.3.7 Any ballot transmitted to an elector by ETS or facsimile shall contain a unique identification number for tracking and auditing purposes.

25.3.8 A log shall be kept by the designated election official of each ballot transmitted to an elector by ETS or facsimile indicating:

(a) The name of the elector;

(b) The fax number to which the ballot was sent, or email address (if applicable);

(c) The unique identification number of the ballot;

(d) The date the ballot and instructions were transmitted; and

(e) The initials of the employee of the designated election official transmitting the ballot.

25.3.8.1 The electronic transmission log as well as any other ETS or fax records shall be maintained as part of the official election record.

25.3.9 The county clerk and recorder shall report to the Secretary of State's office no later than sixty (60) days from the date of the election:

(a) The combined number of mail-in ballots transmitted (faxed, mailed, and transmitted via ETS)

(b) The combined number of mail-in ballots that were returned (faxed, mailed, and transmitted via ETS);

(c) The total number of mail-in ballots that were counted (faxed, mailed, and transmitted via ETS).

Rule 26. Rules Concerning Provisional Voting

26.1 General Rules Regarding Provisional Voting

26.1.1 Eligible electors who have moved within the State of Colorado before the registration deadline may vote a provisional ballot at the polling place on Election Day or in the clerk and recorder's office or designated offices.

26.1.2 If the provisional ballot envelope is used as a voter registration form, it is subject to the same requirements as any other voter registration form.

26.1.3 An elector who has requested a mail-in ballot shall be permitted to cast a provisional ballot upon his or her declaration that they have not and will not cast any vote in the election other than by that provisional ballot.

26.1.4 Provisional ballots for voters who have requested mail-in ballots shall be separated from other provisional ballots and shall not be counted until all mail-in ballots cast in the election have been counted.

26.1.5 For the purposes of Title 1, Article 8.5, C.R.S. and this Rule 26, "statewide offices" shall be defined as the following:

- Governor-Lieutenant Governor (as a pair)
- Attorney General
- Secretary of State
- Treasurer
- Regent of the University of Colorado – At Large
- Justice of the Supreme Court
- Judge of the Court of Appeals

26.1.6 Voter Access to Provisional Ballot Information Required by section 1-8.5-111, C.R.S.

26.1.6.1 The system shall be made available to the voter for no less than thirty (30) days following the date of the election.

26.1.6.2 The system shall provide access to information at no cost to the voter, regardless of the voter's location, by toll-free telephone call, internet website, or other suitable medium, pursuant to 1-8.5-111, C.R.S.

26.2 Emergency Registration and use of Provisional Ballots in the County Clerk and Recorder's Office

26.2.1 If the elector applies for an emergency registration that cannot be qualified in the clerk's office at the time of the registration pursuant to section 1-2-217.5(4), C.R.S., the elector shall be issued a provisional ballot. The elector's registration must be confirmed by the designated election official at the time that the provisional ballots are verified or the provisional ballot shall not be counted.

26.2.2 If an elector whose name is not in the registration records, appears in person at the county clerk and recorder's office and states that he or she has timely registered through an agency pursuant to section 1-2-504, C.R.S., can affirm to the name, location of, and approximate date he or she completed the application at the agency or provide an application receipt, and provides an ID as defined in section 1-1-104(19.5), C.R.S., the elector shall be offered emergency registration and be offered a regular ballot.

26.2.2.1 If the elector does not provide an ID the elector shall be offered a provisional ballot. The county clerk and recorder shall note on the provisional ballot envelope that the elector did not have an ID.

26.2.2.2 If the elector is able to produce an application receipt from the agency registration, but does not provide an ID pursuant to section 1-1-104(19.5), C.R.S., the elector shall surrender the receipt to the election judge, and the county clerk and recorder shall attach the receipt to the provisional ballot envelope.

26.2.3 If an elector whose name is not in the registration records, appears in person at the county clerk and recorder's office and states that he or she has timely registered through a Voter Registration Drive ("VRD") pursuant to section 1-2-504, C.R.S., can affirm to the location of, and approximate date he or she completed the application with the VRD or provide an application receipt, and provides an ID as defined in section 1-1-104(19.5), C.R.S., the elector shall be offered emergency registration and be offered a regular ballot.

26.2.3.1 If the elector does not provide an ID the elector shall be offered a provisional ballot. The county clerk and recorder shall note on the provisional ballot envelope that the elector did not have an ID.

26.2.3.2 If the elector is able to produce an application receipt from the VRD registration, but does not provide an ID pursuant to section 1-1-104(19.5), C.R.S., the elector shall surrender the receipt to the election judge, and the county clerk and recorder shall attach the receipt to the provisional ballot envelope.

26.2.4 If the elector's eligibility to vote cannot be verified, the provisional ballot shall not count, but may constitute a registration for future elections.

26.3 Provisional Voting in the Polling Place

26.3.1 If the elector does not provide a date in the "Previous Residence Information" section of the provisional ballot envelope stating when the elector moved to the address he or she

listed as his or her legal residence on the provisional ballot envelope, the designated election official shall attempt to verify the provisional ballot. If the provisional ballot can be verified, it shall be counted. If it cannot be verified, it shall not be counted.

26.3.2 If the elector whose name does not appear on the pollbook states that he or she applied to register to vote prior to the close of registration with a VRD or agency pursuant to Section1-2-504, C.R.S., the election judge shall:

- Offer the elector a provisional ballot;
- Ask the elector to surrender the application receipt;
- Check the box on the provisional ballot envelope indicating that the voter is a VRD or agency applicant, and
- Attach the receipt to the outside of the provisional ballot envelope.

26.3.3 The word "provisional" shall be marked on the provisional ballot and on the pollbook or signature card next to the elector's name.

26.4 Verification of Provisional Ballots

26.4.1 When the designated election official has concluded that all voted provisional ballots have been delivered to and received by the election office, the designated election official shall determine the time that provisional verification and processing begins in accordance with the deadlines set forth in title one and these rules. The designated election official or designee shall complete preliminary verification without opening the provisional ballot envelopes.

26.4.2 When verifying provisional ballots, the designated election official must check the county voter registration database to see whether the elector has already voted in the election.

26.4.3 When the designated election official has received both a mail-in ballot and a provisional ballot from an elector, but there is a discrepancy between the signature on the returned mail-in ballot envelope and the voter's signature on file with the county clerk and recorder, the discrepancy must be resolved. Before the provisional ballot may be counted, the elector must affirm that the signature on the mail-in ballot envelope is not his or her signature. Section 1-8.5-105(4) and (5), C.R.S.

26.4.4 Verification of an elector's eligibility to have his or her provisional ballot counted shall be limited to the following sources to determine proof of voter registration:

(a) Sources provided by the Secretary of State or law enforcement agencies regarding felons who are serving a sentence of detention or confinement or on parole;

(b) The local election office voter registration database;

(c) The Secretary of State's voter registration database;

(d) The DMV Motor Voter database (Note: Possession of a driver's license is not conclusive proof of voter registration; elector must have registered to vote through the DMV.)

26.5 Counting of Provisional Ballots

26.5.1 If the information contained in the provisional ballot envelope provides adequate criteria so that the designated election official is able to confirm under election rule 26 that the elector is registered, the provisional ballot shall count.

26.5.2 Pursuant to section 1-2-509(3), C.R.S., if the designated election official receives a provisional ballot from a voter who registered to vote but had an incomplete or deficient voter registration application, and did not supply the required information at the time of registration, at any time prior to voting, or on the provisional ballot envelope, the provisional ballot shall not be counted. If the voter does supply the required information prior to or at the time of voting, then the provisional ballot may be counted.

26.5.3 Acceptance Codes (Any provisional ballot given an acceptance code shall have all races counted unless otherwise indicated.)

AOK Reviewed and confirmed voter's eligibility.

ADB Election official is knowledgeable that the elector was erroneously sent to the wrong precinct or erroneously given the wrong ballot style in the elector's correct precinct. Voted ballot will be duplicated and only races and issues for which the elector is qualified to vote shall be counted.

AEJ Election judge who was appointed after close of early and mail-in voting and is working outside his or her precinct; judge shall vote on a ballot in the precinct in which he or she is working; voted ballot will be duplicated so that only the races and issues for which the judge is qualified to vote shall be counted.

AAB Voter appeared in person and affirmed under oath that he or she applied for a mail-in ballot but he or she has not and will not cast the mail-in ballot. The designated election official shall determine that voter did not previously cast a mail-in ballot for that election pursuant to Rule 26.

ACP Voter moved from the county in which the voter was registered to another county in the state not less than thirty days before the election and voted in the correct precinct in the new county of residence. The voter's address will be updated. Section 1-8.5-107(2)(a), C.R.S.

AFS Voter is registered in the county but is voting in the wrong precinct or the voter moved from the county in which the voter was registered to another county in the state less than thirty days before the election. Only the votes for federal and statewide offices and statewide ballot issues and questions upon which the voter may vote shall be counted. Section 1-8.5-108(2), C.R.S.

AVD Voter registered through a voter registration drive and the application receipt was surrendered to the election judge, or the elector affirmed as to the approximate date and location of the registration with the voter registration drive in accordance with section 1-2-217.5(2), C.R.S.

AAG Voter registered through an agency and application receipt was surrendered to election judge, or the elector affirmed as to the date, name, and location of the registration with the agency in accordance with section 1-2-217.5(2), C.R.S.

ARD Voter had deficient or incomplete registration. The required information was provided by voter on the provisional ballot envelope. Voter's registration will be amended and registration will be complete. Section 1-2-509(3), C.R.S.

26.5.4 Rejection Codes (Any ballot given a rejection code shall not be counted):

RFS (Rejection federal or state) No federal or state candidates or issues to duplicate.

RNS (Rejection not signed) Provisional Ballot Affidavit not signed.

RIN (Rejection incomplete information provided) Required information is incomplete and the designated election official is unable to confirm voter's eligibility.

RNR (Rejection not registered) Voter did not register by the voter registration deadline or by emergency registration, Colorado voter registration record was not found, or voter was previously cancelled and has not been reinstated pursuant to section 1-2-605(10), C.R.S.

REE (Rejection envelope empty) Provisional ballot envelope is empty.

RAB (Rejection voter voted mail-in ballot) Designated election official has confirmed that voter voted a mail-in ballot.

REV (Rejection based on ballot cast in early voting) Voter voted early.

RIP (Rejection based on incorrect party) Incorrect Party in Primary Election.

RFE (Rejection felon not eligible to vote) Individual was convicted of a felony and is either serving a sentence of confinement or detention or is on parole.

RWC (Rejection elector not registered in county or State of Colorado) Non-county or non-state resident; therefore voter not eligible to vote in the county where the provisional ballot was voted.

RID (Rejection first time voter has not supplied identification upon registration or thereafter prior to and during time voter voted) First Time Voter who registered by mail or through a voter registration drive, is tagged as id deficient, and did not provide id at the time of voting.

RRD (Rejection registration deficient) Voter had deficient or incomplete registration and required information was not provided prior to or at the time of filling in the provisional ballot envelope. Voter's eligibility cannot be established. Section 1-2-509(3), C.R.S.

26.6 The provisional ballot log required by section 1-8.5-110 (4), C.R.S., may be prepared by the designated election official in handwritten or computer-generated form.

26.7 Recount procedures for provisional ballots shall be the same as the recount procedures for other ballots as directed by the Secretary of State.

26.8 Pursuant to section 1-8.5-102(2), C.R.S., the provisional ballot affidavit shall contain the following language:

I do solemnly affirm that I am a citizen of the United States, that I have attained the age of eighteen years, and that I have resided in the State of Colorado and in my present precinct at least thirty days before the election, or at my current residence address since the date I moved as shown above. I further affirm that the address indicated in this affidavit is my sole legal residence and that I claim no other place as my legal residence. I affirm that if I applied for a Mail-in Ballot I have not and will not cast the Mail-in Ballot that I requested. I further affirm under penalty of law

that I have not and will not cast any vote in this election except by the enclosed ballot, that I will not vote in any other precinct, county or state, and that my ballot is enclosed in accordance with the provisions of the "Uniform Election Code of 1992", Article 1 to 13 of Title 1, C.R.S.

26.9 Pursuant to section 1-8.5-103, C.R.S., the size of the provisional ballot envelope or affidavit form shall be in such a manner as to provide to the elector complete and legible information as shown on the state approved form. Any alterations to the standard format shall be submitted to the secretary of state pursuant to the policy statement concerning secretary of state approved forms.

Rule 27. Rules Concerning Uniform Ballot Counting Standards

27.1 Definitions

27.1.1 Blank Ballot. A blank ballot is one on which the voter has made no marks in any voting position, or has been marked with an unreadable marker, or is one which has been consistently marked outside of the "read" area of the scanner.

27.1.2 Damaged Ballot. A damaged ballot is one that has been torn, bent, or otherwise mutilated or rendered unreadable, so that it cannot be processed by the optical scanner ballot reader.

27.1.3 Duplicated Ballot. A duplicated ballot is one for which a true copy is made in order to be properly processed and counted due to damage, improper marking or some other reason which would prevent a ballot tabulating machine from accurately counting the ballot.

27.1.4 Duplicated Provisional Ballot. A duplicated provisional ballot includes ballots duplicated for federal and state issues for which a provisional voter is eligible to vote.

27.1.5 Overvote. An overvote is a race, question or issue which contains votes for more than the maximum number of candidates or responses for a ballot question or issue allowed.

27.1.6 Undervote. An undervote occurs when the voter does not vote for a candidate, question, or issue, or when more than one person in a race is available, the voter does not vote for the maximum number of votes allowed.

27.1.7 Vote in Optical Scan Ballots. A correctly voted optical scan ballot occurs when a voter, using a readable marker, fills in or connects the minimum number of ovals/arrows per race, question, or issue, not to exceed the maximum allowable votes per race, question or issue, without extending the vote mark beyond the parameters of the instructions.

27.1.8 Write-In Vote. A vote on a ballot on which the voter physically writes in the name of a legally qualified write-in candidate in the space reserved on the ballot for write-in votes and properly marks the oval or connects the arrow on optical scan ballots according to the directions provided to the voter.

27.2 Multiple Page Ballots. In any election where a multiple page printed ballot is used, a voter must vote and return all pages of the ballot at the same time. Any voter who has returned at least one page of a multiple page printed ballot will be considered to have voted. Any additional page returned at a later time shall not be counted but shall be appropriately marked, set aside, and preserved as other election materials in accordance with section 1-7-802, C.R.S.

27.3 Uniform Counting Standards for hand-counted Paper Ballots

27.3.1 Judges counting ballots on election day shall take into consideration the intent of the voter.

27.3.2 If a ballot contains markings for more than the maximum votes allowed in a candidate race or for a ballot issue or question, no vote shall count for that race, question, or issue. Judges shall take into consideration any notation by the voter that would clearly indicate the choice of the voter.

27.3.3 If an issue, question or candidate race contains no markings by the voter, no tally will be made for that race, question, or issue, but all other candidate races, issues, or questions properly marked by the voter on the ballot shall be counted.

27.3.4 A ballot which has no markings for any candidate races, issues or questions shall be tallied as a blank ballot, but the voter shall be given credit for voting.

27.3.5 If the intent of the voter is clear on a write-in vote, the write-in vote shall be counted for a legally qualified candidate.

27.4 Uniform Counting Standards for Optical Scan Ballots

27.4.1 Precinct Optical Scan Procedures

(a) Voters whose ballots are rejected or sorted by the precinct counter as a blank or overvoted ballot shall be given the opportunity to correct their ballot.

(b) Ballots sorted to a write-in bin shall be tallied at the conclusion of the voting and delivered to the central counting center in a secure container.

27.4.2 Central Count Optical Scan Procedures

(a) A resolution board, consisting of a team(s) of one (1) Republican and one (1) Democrat for partisan elections or two (2) qualified election judges for nonpartisan elections, shall resolve all ballots sorted by the central count optical scan equipment.

(1) The board shall be observed by two (2) witnesses, who in any partisan election shall be representatives of each major political party, who may not handle or process ballots.

(2) All persons engaged in the counting and processing of ballots shall be deputized or take an oath to faithfully perform their duties.

(3) The resolution board shall maintain a log for each step of verification, duplication, and counting.

(b) Sequence of Resolution Procedures

(1) A zero tape shall be run indicating no votes cast or counted before the counting begins.

(2) Official ballots shall be processed through the optical scanner, with sorted overvotes, blank ballots, and write-in ballots viewed and resolved by the resolution board. Only ballots sorted by the machine shall be subject to review by the resolution board. If there are no legally qualified write-in candidates, the write-in sort option shall not be utilized. The

number of each duplicated ballot shall be entered on the resolution board log sheet.

(3) All ballots which are sorted by the optical scanner and resolved by the resolution board by duplication are to be indicated as such and kept separate from the standard run ballots for the precinct.

(4) The precinct judge's ballot reconciliation form is compared to the number of scanned ballots for the precinct.

(5) After the final precinct has been tallied, the total write-in votes shall be indicated on the final summary along with the seal numbers for each sealed box of scanned ballots.

(c) Resolution of optical scan ballots

(1) Damaged or defective ballots shall be duplicated utilizing the ballot duplication procedures as provided in Rule 27.4.2(c)(5).

(2) Blank ballots shall be examined by the resolution board to determine if the ballot is a true blank ballot or one that has been marked with a non-detectable mark. Resolution board members must make a duplicate copy of the ballot which has been marked with a non-detectable mark utilizing the ballot duplication procedures as set forth in Rule 27.4.2(c)(5). If a ballot is truly blank it shall be sent back for the resolution pass through the scanner, and the ballot tabulated with no races, issues or questions voted.

(3) Overvoted ballots shall be inspected by the resolution board. Ballots that reflect marks that are clearly identified as unintentional but register an overvote on the scanner must be duplicated by the resolution board utilizing the procedures for duplication of ballots. If more marks are completed in a race, question, or issue than what is allowed for that race, question, or issue the duplication board can only duplicate if there is a notation by the voter that would clearly indicate the choice of the voter.

(4) Write-in votes sorted by the optical scan equipment on election day shall be delivered to the assigned write-in board for hand counting. In order to be counted, the oval must be darkened or the arrow connected according to the appropriate voting instructions. Only votes for legally qualified write-in candidates shall be counted. When a race with a valid write-in is overvoted and the duplication board finds that a mark has been made for a valid candidate and the voter also wrote in the name of the same candidate on the write-in line and made a mark, the duplication board shall duplicate the ballot by making a mark by the name of the candidate printed on the ballot.

(5) The resolution board shall duplicate ballots by clearly labeling the new duplicate ballot as a "DUPLICATE" and assign a serial number which shall be recorded on both the original and duplicate ballot. For example, the first ballot in Precinct # 1 to be duplicated could be labeled as #1/001 with the duplicate labeled D#1/001. Original ballots shall be separated from the duplicate ballots and placed in an envelope clearly marked "ORIGINAL BALLOTS." The duplicate ballots shall be counted in lieu of the original ballots.

(6) The resolution board shall maintain an official audit log setting forth the precinct number, duplicate ballot number, reason (with specificity) that the ballot was duplicated, date of duplication, and the initials of the members of the duplication board responsible for duplicating the ballot.

(d) Recount Procedures for Optical Scan

(1) Optical scan equipment must be set to consistent sensitivity standards for each system type, must be tested prior to the recount, and shall be programmed to sort undervotes for the individual race(s), issue(s) or question(s) being recounted.

(2) Recounts will include a visual inspection of all ballots cast for write-in candidates in the contested race(s) to determine voter intent.

27.5 Duplication of Ballots.

(a) Using the damaged ballot as the guide, a blank ballot shall be marked by a duplicating team, so that the votes recorded are identical to those indicated on the damaged ballot, and shall be proofed to insure that is marked properly and accurately.

(b) A unique number shall be assigned to both the original and duplicated ballot. This will reference the two ballots together and provide an audit trail. (Example: the ballots may be marked XX-NNN, where XX is the precinct number and NNN are consecutive numbers starting with the number one.)

(c) The duplicate ballot shall be placed with all other ballots to be counted.

(d) The damaged or unreadable original ballot shall be marked "DUPLICATED" to indicate that the ballot has been duplicated and the duplication is completed. All duplicated original ballots for a precinct along with any applicable printed material shall be placed in an envelope and clearly marked "BALLOTS THAT HAVE BEEN DUPLICATED."

Rule 28. Rules Concerning Election Judges

28.1 For purposes of training election judges, an "election cycle" shall mean all elections held during a calendar year beginning with January 1 and ending December 31.

28.2 In lieu of the oath for other election judges prescribed in section 1-6-114, C.R.S., each person appointed to serve as a student election judge shall take a self-affirming oath or affirmation before beginning their duties as a student election judge, in substantially the following form:

"I, _____ do solemnly swear (or affirm) that I am a citizen of the United States and state of Colorado; that I am at least 16 years of age and a High School Junior or Senior; that I will perform the duties of an election judge according to law and to the best of my ability; that I will studiously strive to prevent fraud, deceit, and abuse in conducting the same; that I will not try to determine how any elector voted, nor will I disclose how any elector voted if in the discharge of my duties as a student election judge such knowledge shall come to me, unless called upon to disclose the same before some court of justice; that I have never been convicted of election fraud, any other election offense, or fraud and that, if any ballots are counted before the polls close on the date of the election, I will not disclose the result of the votes until after the polls have closed and the results are formally announced by the designated election official."

Rule 29. Rules Concerning Procedures for the Verification of Signatures

29.1 Missing Signature on Mail Ballot, Provisional Ballot or Mail-in Ballot Envelope

29.1.1 When the election judge reviews the mail ballot return envelope pursuant to section 1-7.5-107.3, C.R.S., or mail-in ballot return envelope pursuant to section 1-8-114.5, C.R.S., or the provisional ballot return envelope pursuant to section 1-8.5-105(3)(a), C.R.S., and notices that the envelope lacks a signature, the election judge shall contact the eligible elector in writing no later than two calendar days after election day. A copy of the written notification shall be kept in an official file, which shall become part of the official election record. Nothing in this rule shall be construed to prohibit the designated election official from calling the elector; however, a phone call shall not substitute for notification to the elector in writing.

29.1.2 The letter shall inform the eligible elector that they must come to the office of the county clerk and recorder to sign the mail ballot, provisional ballot, or mail-in ballot envelope no later than eight (8) calendar days after election day.

29.1.3 The letter sent by the election official shall not constitute a violation of section 1-13-801, C.R.S.

29.1.4 The form shall include the following language:

"Any person who knowingly violates any of the provisions of the election code relative to the casting of ballots or who aids or abets fraud in connection with any vote cast, or to be cast, or attempted to be cast shall be punished by a fine of not more than five thousand dollars or by imprisonment in the county jail for not more than eighteen months, or by both such fine and imprisonment. Section 1-13-803, C.R.S.

29.2 In accordance with section 1-8-114.5, C.R.S., for mail-in ballots and section 1-7.5-107.3, C.R.S., for mail ballots, the election judges shall compare the signature on the self-affirmation on each respective "Return Envelope" with the signature on file with the county clerk and recorder or election official. Signatures shall require further research if any of the following discrepancies are discovered:

Code 1 – An obvious change in the slant of the signature

Code 2 – A printed signature on one document and a cursive signature on the other document

Code 3 – Differences in the size or scale of the signature

Code 4 – Differences in the individual characteristics of the signatures, such as how the "t's" are crossed, "I's" are dotted, loops are made on "Y's" or "J's"

Code 5 – Differences in the voter's signature style, such as how the letters are connected at the top and bottom

Code 6 – Ballots or envelopes from the same household have been switched

Code 7 – 'Other,' including misspelled names & description of discrepancy

29.3 If further research is necessary, the election judge shall check the county clerk's or election official's file for at least two additional documents signed by the voter, if available. Additional

information, written by the voter on the "Return Envelope", such as the voter's address and date of signing may be compared for similarities. Any similarities noted when comparing this other information may be used as part of the signature verification decision process.

29.3.1 If it appears to the judges verifying the self-affirmation on the return envelopes that members of the same household who have applied for mail-in ballots or have been sent mail ballots have inadvertently switched envelopes or ballots, the ballot or ballots shall be counted and no letter of advisement to the elector is necessary.

29.4 Whenever a signature is disputed, the election judge shall document the discrepancy by completing a log. The log shall provide a record of the research steps taken to resolve the issue. The log will identify the voter using a unique tracking number. This tracking number shall not contain the voter's social security number; Colorado issued driver's license number, or the identification number issued by the Department of Revenue.

29.5 The log shall be approved by the Secretary of State pursuant to section 1-1-109, C.R.S.

29.6 There shall be no document containing the voter's signature attached to the research log.

29.7 If both sets of election judges agree that the signatures do not match, the county clerk and recorder shall within two days after the election, send a letter to the eligible elector at the address indicated in the registration records and the address where the mail-in ballot or mail ballot was mailed explaining the discrepancy in signatures and a form for the eligible elector to confirm that the elector returned a ballot to the county clerk and recorder. (Sections 1-7.5-107.3(2)(a) and 1-8-114.5(2)(a), C.R.S.) The voted ballot itself should not under any circumstances be returned with this letter.

29.8 The form of the letter as well as the form sent to the elector shall be approved by the Secretary of State pursuant to section 1-1-109, C.R.S.

29.9 The letter sent by the election official shall not constitute a violation of section 1-13-801 C.R.S.

29.10 The final signature verification resolution and ballot disposition shall be noted on the research log.

29.11 Any uncounted ballot shall remain sealed in the return envelope and stored under seal with all other uncounted ballots as part of the election record pursuant to section 1-7-802, C.R.S., and may be removed only under the authority of a district attorney or by order of a court having jurisdiction.

Rule 30. Rules Concerning Voter Identification

30.1 Definitions

30.1.1 "Registration in person" means any registration personally completed by the voter at any clerk's main or branch office or personally delivered by the voter to any clerk's main or branch office, driver's license office, or other voter registration agency.

30.1.2 "Mail Registration" or "Registration by mail" includes any registration not personally delivered by the voter to any clerk's main or branch office, voter registration agency, driver's license office, or other human services agency. These registrations include, but are not limited to, postmarked registration forms and voter registration drives.

30.1.3 As referenced in these rules, “tagging a voter” for ID before voting means identifying a voter in the voter registration database as one who registered by mail and did not supply required identification. Tagged voters require a copy of the required identification to be enclosed with a mail-in or mail ballot.

30.1.4 A tagged voter may present the required voter ID or a number which is subsequently verified to the county clerk and recorder at any time prior to returning a voted mail or mail-in ballot to satisfy the provisions of Rule 30.1.3.

30.1.5 “SSN” as used in these rules shall mean either the entire Social Security Number or the last four (4) digits of the Social Security Number.

30.1.6 “ID” as used in these rules shall mean identification as defined in compliance with section 1-1-104(19.5), C.R.S., as a copy of one of the following:

- A valid Colorado driver’s license;
- A valid identification card issued by the Department of Revenue in accordance with the requirements of Part 3 of Article 2 of Title 42, C.R.S.;
- A valid U.S. passport;
- A valid employee identification card with a photograph of the eligible elector issued by any branch, department, agency, or entity of the United States government or of this state, or by any county, municipality, board, authority, or other political subdivision of this state;
- A valid pilot’s license issued by the federal aviation administration or other authorized agency of the United States;
- A valid U.S. military identification card with a photograph of the eligible elector;
- A copy of a current utility bill, bank statement, government check, paycheck, or other government document that shows the name and address of the elector. (A cable bill, a telephone bill, documentation from a public institution of higher education in Colorado containing at least the name, date of birth, and legal residence address of the student elector, a paycheck from a government institution, or a Certificate of Degree of Indian or Alaskan Native Blood are sufficient forms of identification);
- A valid Medicare or Medicaid card issued by the United States Health Care Financing Administration;
- A certified copy of a U.S. birth certificate for the elector issued in the United States
- Certified documentation of naturalization; or
- A valid student identification card with a photograph of the eligible elector issued by an institute of higher education in Colorado, as defined in section 23-3.1-102(5), C.R.S.

30.1.7 As used in section 1-1-104(19.5)(a)(VII) “current” refers to current utility bill, current bank statement, and current government check, paycheck, or other government document that shows the name and address of the elector. Current means that the date of the document

is within 60 days of the date submitted for identification purposes unless the document states a longer billing cycle.

30.2 Voter registration in person.

30.2.1 Registering in Person. The elector must provide:

- A valid Colorado Driver's License number;
- if the voter does not have a valid Colorado Driver's License, the voter shall provide the number of the voter's current and valid identification card issued by the Colorado Department of Revenue.
- If the voter has not been issued a valid Colorado Driver's License or ID card issued by the Department of Revenue, then the voter shall provide at least the four last digits of the voter's social security number.

Authority: Section 1-2-204(2)(f.5), C.R.S.

30.2.2 A voter is not required to show or present his current and valid Colorado driver's license or ID. It is sufficient for the voter to provide the number.

30.2.3 If an applicant for voter registration has not been issued a current and valid Colorado driver's license or a current and valid identification card issued by the Department of Revenue or a social security number, the election official shall nevertheless register the voter. The applicant shall be assigned a unique identification number that will serve to identify the applicant for voter registration purposes. Section 1-2-204 (2.5), C.R.S.

30.3 Voter Registration by Mail

30.3.1 Registering by Mail. (Including Voter Registration Drives).

(a) The voter must provide one of the following identification numbers:

(b) The person's Colorado Driver's License number or ID number issued by the Department of Revenue; if the voter does not have a current and valid Colorado Driver's License or ID card issued by the Department of Revenue, the voter shall provide the last four digits of the voter's social security number.

(c) If a voter has not been issued a Colorado Driver's License number, ID card issued by the Department of Revenue or a Social Security card, the voter must provide a copy of one of the forms of identification listed in 30.1.6.

Authority: Sections 1-2-501(2)(a), C.R.S. and 1-1-104(19.5), C.R.S.

30.3.2 Prior to the implementation of the statewide voter registration database, For any voter registration application received by mail that does not have enclosed a copy of the Colorado Driver's License number, number of an identification card issued by the Department of Revenue, or Social Security number listed, the ID number shall be verified against the Department of Motor Vehicle Motor/Voter Database and the Secretary of State voter registration database. When access to the Social Security database becomes available, that database shall also be utilized. If a number cannot be verified and the voter failed to supply one of the forms of ID listed in 30.1.6, the voter's record will be tagged. (Upon creation of the statewide voter registration system, the check will be performed automatically.)

30.3.3 If, for a registration by mail, a copy of an ID is enclosed per section 1-1-104(19.5), C.R.S., no further verification against the Department of Motor Vehicle Motor/Voter Database, the Secretary of State voter registration database or the Social Security database is required. The voter shall not be tagged and shall be allowed to vote by mail or mail-in ballot without submitting additional identification requirements.

30.3.4 Subject to Rule 30.5.1, if the identification number supplied does not match the identification number on the database record for the name and date of birth, the registration by mail shall not be considered verified. However, if the voter has made a minor error, the Clerk and Recorder may use good judgment and correct the error, and consider the voter verified. Minor errors include, but are not limited to, a transposition of two numbers, or accidentally adding or omitting a number.

30.4 Verification of Identification:

30.4.1 Verification shall include a match of name, date of birth and ID number on an existing state identification record. A match of only one or two of these items shall not be considered verification. During verification, names given which are similar common variants or nicknames of the name shall be acceptable.

30.5 Tagging a voter:

30.5.1 Only a voter who has registered by mail may be tagged; a person who registers in person shall not be tagged.

30.5.2 A voter who registers by mail and provides a copy of an acceptable ID as provided in section 1-1-104(19.5), C.R.S., shall not be tagged. A social security card is not listed as ID in section 1-1-104(19.5), C.R.S.

30.5.3 If a voter registers by mail and supplies a Colorado Driver's License number or Colorado Department of Revenue ID number (but not a copy) and/or the social security number, and if at least one of the numbers can be verified with an existing state identification record bearing the same number, name and date of birth, the voter shall not be tagged.

30.5.4 A voter, who registers by mail and does not supply a copy of an acceptable ID as provided in 1-1-104(19.5), C.R.S., and does not list his/her driver's license number, Colorado Department of Revenue ID number or social security number, shall not be registered.

30.5.5 If a voter registers by mail and supplies either a Colorado Driver's License number or Colorado Department of Revenue ID Number (but not a copy) and/or social security number, but no number can be verified with an existing state identification record bearing the same number, name and date of birth against the Driver's License database, Secretary of State voter database or Social Security database once access to the Social Security database becomes available, the voter shall be tagged.

30.5.6 The tag status for a voter shall be removed if the voter votes in person showing an acceptable ID or votes by mail or and encloses a valid ID.

30.5.7 If the identification number supplied is discovered as incorrect upon verification, and the county clerk and recorder discovers the correct number, the clerk and recorder may enter the correct number on the voter's permanent voter registration record, but the voter shall be tagged.

30.6 If a voter registering by mail does not provide a Colorado Driver's License number, Colorado identification card number or the last four digits of the voter's social security number on the voter registration application, and the county clerk and recorder discovers such identification number, the clerk and recorder may enter the applicable identification number on the voter's permanent voter registration record. Any number entered on the voter's permanent voter registration record by the clerk and recorder does not remove the tag status of a voter. Such voter is still required to provide valid identification prior to voting in person, by mail ballot or by mail-in ballot.

30.7 Addresses on identification

30.7.1 Some forms of identification may not contain an address. If the address appears on the identification, the address must be in Colorado. If ID presented lists only a box number or Post Office box number instead of a residence address, the registrar shall accept the voter's affirmation, as long as the city is in Colorado.

30.7.2 Utility bills, bank statements, government checks, government paychecks or other government documents must show the name of the voter and Colorado address.

30.8 A suspended license is considered current and valid. A revoked or expired license is not considered current and valid and is not acceptable.

30.9 The Colorado Driver's License or Department of Revenue issued ID referred to in section 1-2-217.5(1)(b), C.R.S., or elsewhere in statute, where not specifically stated, must be current and valid.

30.10 Pursuant to section 1-1-104(19.5)(a), C.R.S., if an ID that requires a photograph does not contain a photograph, it is not an acceptable ID for registration by mail or voting purposes.

30.11 Identification for Voting in Person

30.11.1 Voting in Person. (Including early voting, polling place voting).

(a) The acceptable forms of ID for voting in person are listed in Rule 30.1.6

(b) A Social Security Number (or last four digits) is NOT a legal form of ID for voting in person.

Authority: Sections 1-7-201 and 1-1-104(19.5), C.R.S.

30.11.2 When the voter shows ID pursuant to section 1-1-104(19.5), C.R.S., the election judge shall check to ensure that the name matches, and that the address, if one is listed, is in the State of Colorado. During verification, names given which are similar common variants or nicknames of the name shall be acceptable.

30.12 Identification for Voting by Mail

30.12.1 Voting By Mail (Including Mail-in Ballot)

(a) The acceptable forms of ID for voting by mail for first time voters are listed in Rule 30.1.6.

(b) A Social Security Number (or last four digits) is NOT a legal form of ID for voting by mail.

30.13 Identification presented by the voter when registering to vote by mail, or presented by the voter

when returning the voted mail ballot or mail-in ballot, is not required to be scanned or imaged into the permanent voter registration database, but shall be retained by the designated election official for a period of 25 months after the date of the election.

30.14 If a voter has been directed to return identification with his or her voted ballot, the election judge shall open the returned envelope to retrieve the required information. If the required information cannot be found in the return envelope, the election judge shall open the secrecy envelope/sleeve to find the required identification in an effort to not disenfranchise the voter.

30.15 If a tagged voter requests a mail-in ballot, the local election official shall send such ballot with written instructions advising the voter of the requisite forms of identification needed to be provided with the mail-in ballot. The local election official shall send the mail-in ballot by the deadline set forth in section 1-8-104(3), C.R.S. If a mail-in ballot is returned without ID as defined in Rule30.1.6, then the ballot shall be treated as a provisional ballot and verified pursuant to Rule 26.4.

Rule 31. Rules Concerning Help America Vote Act, Title III: Administrative Complaint Procedures

31.1 The HAVA Title III complaints may be received by the Secretary of State's office or the designated election official's office. The HAVA Complaint procedure shall be uniform and nondiscriminatory. The Complaint procedure shall conform to section 1-1.5-105(2)(a), C.R.S., as follows:

(a) A uniform and nondiscriminatory complaint procedure;

(b) Authorization for any person who has either been personally aggrieved by or has personally witnessed a violation of title III of HAVA that has occurred, is occurring, or that is about to occur, as applicable, to file a complaint;

(c) A description by the complainant in his or her complaint of the alleged violation with particularity and a reference to the section of HAVA alleged to have been violated;

(d) A requirement that the complaint be filed no later than one year from the date of either the occurrence of the alleged violation or of the election giving rise to the complaint, whichever is later;

(e) A requirement that each complaint be in writing and notarized, signed, and sworn by the person filing the complaint;

(f) Authorization for the secretary to consolidate two or more complaints;

(g) At the request of the complainant, a hearing on the record;

(h) Authorization for the secretary to provide an appropriate remedy if the secretary determines that any provision of title III of HAVA has been violated or to dismiss the complaint and publish the results of his or her review if the secretary determines that no provision of title III of HAVA has been violated.

(i) A final determination on the complaint by the secretary prior to the expiration of the ninety-day period that begins on the date the complaint is filed, unless the complainant consents to an extension of time for making such determination;

(j) Resolution of the complaint within sixty days under an alternative dispute resolution

procedure that the secretary shall establish in accordance with the requirements of this rule if the secretary fails to satisfy the applicable deadline specified in section 1-1.5-105(2)(i), C.R.S., and the availability of the record and any other materials from any proceedings conducted under the complaint procedures established for use under such alternative dispute resolution procedures;

(k) Authorization for the secretary to conduct a preliminary review of any complaint submitted to him or her and to dismiss any complaint that he or she finds is not supported by credible evidence; and

(l) Recovery by the secretary of the costs of the proceeding against any complainant who files a complaint that, in connection with the final determination by the secretary pursuant to section 1-1.5-105(2)(i), is found on the basis of clear and convincing evidence to be frivolous, groundless, or vexatious.

31.2 The complaint must be in writing and may be submitted on a form designated by the Secretary of State or in a letter written by the complainant. The letter shall contain the following:

(a) The complainant's name;

(b) The complainant's full residence address, including county, and mailing address (if different from residence);

(c) A description of the alleged violation with particularity and a reference to the section of Title III of HAVA alleged to have been violated;

(d) A completed, notarized oath signed by the complainant where he or she states that the facts of the complaint are true and correct to the best of his or her knowledge and belief.

31.3 Whenever possible, any completed complaints mailed to the Secretary of State or the designated election official shall be sent in a unique, distinguishable envelope as approved by the Secretary of State. This unique envelope shall be given to the complainant at the same time as the complaint form and instructions.

31.4 Upon receipt of the HAVA complaint, the Secretary of State or designated election official shall note the date received and unique tracking number on the complaint form. The Secretary of State's office shall establish a unique tracking number for its use, and the designated election official shall use the Secretary of State's county ID number for that county, the last two digits of the present year, and a sequence number according to the amount of complaints already received by the county, placing hyphens between groupings of numbers. (For example, the first one received would be the two digit county number-last two digits of the year-03 with 01, 02, 03, etc. numbering any sequential complaints).

31.5 If the complaint is received by the Secretary of State's office, the unique tracking number shall be added to the form and the form shall be faxed to the designated election official in the county where the alleged violation occurred. The complainant shall receive a copy of the submitted complaint with all check-in notations and tracking numbers included.

31.6 If the complaint is received by the designated election official, the county tracking number shall be added to the form and the form shall be faxed to the Secretary of State's office within one business day. The complainant shall receive a copy of the submitted complaint with all check-in notations and tracking numbers included. The original complaint form shall be hand delivered or mailed to the Secretary of State's office, and a copy shall be retained by the designated election official.

31.7 Any original mailed complaints sent by the designated election official and received by the Secretary of State's office shall be sent in a unique, distinguishable mailing envelope as approved by the Secretary of State. This unique envelope will ensure that the complaint is easily recognizable and will be processed in a timely manner.

31.8 If the complaint is received by the designated election official and the original sent to the Secretary of State's office, the Secretary of State's office shall notify the designated election official, either by fax or letter, of the office's unique tracking number when the form is received at the Secretary of State's office. This official notification may be used for documentation purposes.

31.9 The designated election official shall not make any determination as to the validity of the alleged complaint during the submission process, but shall forward all information to the Secretary of State's office. The county may, however, begin researching the alleged violation on the local level once the complaint is received.

31.10 Any information gathered by the designated election official shall be documented with specific details, including the date, and shall be used for reference purposes.

Rule 32. Rules Concerning Recall

32.1 In any recall election of a partisan office, the successor nominee's party affiliation shall be listed with his or her name on the ballot.

32.2 Signature requirements

32.2.1 For petitions to recall school district directors the petition must be signed by the eligible electors of the director's district equal in number to at least 40% of the ballots cast in the district in the last preceding election at which the director to be recalled was elected as indicated by the pollbook or abstract for the election. See section 1-12-105, C.R.S.

32.2.2 When determining the number of required valid signatures for an elected office for which electors were allowed to vote for more than one candidate in a single race, the signature requirements shall be based on the number of ballots cast for that race as indicated by the pollbook or abstract for the election.

32.2 Petition sufficiency occurs when upon review, it is established that the petition contains the required number of valid signatures.

32.3 When a protest is filed, petition sufficiency is sustained upon conclusion of the protest when the designated election official or the district judge maintains that there are sufficient valid signatures.

32.4 When an officer subject to being recalled resigns within the five days after the sufficiency of the recall petition has been sustained, the recall election does not go forward, and the position is declared vacant and filled according to statute.

Rule 33. Rules Concerning Voters Who Vote After the Polls Close Pursuant to a Court Order

33.1 Any individual who votes in an election for federal office as a result of a federal or state court order or any other order that is in effect 10 days before that election and which extends the time established for closing the polls by state law may only vote in that election by casting a provisional ballot pursuant to state law and the rules and regulations prescribed by the Secretary

of State.

33.1.1 Any such provisional ballot cast under this rule shall be separated and held apart from other provisional ballots cast by those voters not affected by the court order.

Rule 34. Rules Concerning the Adoption of Accessible Voting Systems under The Help America Vote Act of 2002.

34.1 The requirements of §301(a)(3) of The Help America Vote Act of 2002 ("HAVA") to implement voting systems that: (1) are accessible for individuals with disabilities, including non-visual accessibility for the blind and visually impaired, in a manner that provides the same opportunity for access and participation (including privacy and independence) as for other voters and (2) provide alternative language accessibility pursuant to the requirements of section 203 of the Voting Rights Act of 1965 (42 U.S.C. 1973aa-1a) are triggered when a political subdivision acquires a new voting system by lease or purchase using HAVA §301(a)(3) funds after January 1, 2003.

34.2 No political subdivision shall purchase or lease direct recording electronic (DRE) voting systems or other voting systems equipped for individuals with disabilities at each polling place unless such voting system(s) are fully certified pursuant to standards and guidelines recommended by the National Institute of Standards and Testing (NIST) and adopted by the U.S. Election Assistance Commission (EAC).

34.3 The Secretary of State, as custodian of §301(a)(3) of HAVA funds, will not distribute such funds to any political subdivision to pay for accessible voting systems that have not been fully certified by the EAC and the Secretary of State.

34.4 Only the acquisition of a new voting system (or substantial modification of an existing voting system) that will change voters' interaction with the ballot at the polling sites triggers §301(a)(3) of HAVA.

34.5 If a political subdivision acquires a new voting system, the system must be accessible to persons with physical, cultural/educational, mental/cognitive disabilities and provide the voter in a manner that provides the same opportunity for access and participation (including privacy and independence) as for other voters.

34.6 The Help America Vote Act requires that a newly acquired voting system be placed in every early voting and Election Day polling site by January 1, 2006.

Rule 35. Rules Concerning Requirements for Voting System Accessibility

35.1 A voting system shall be accessible to voters with physical disabilities including no vision, low vision (visual acuity between 20/70 and 20/200, and/or 30 degree or greater visual-field loss), no hearing, low hearing, limited manual dexterity, limited reach, limited strength, no mobility, low mobility, or any combination of the foregoing by providing voters with physical disabilities with a practical and effective means to cast an independent and secret ballot in accordance with each of the following, assessed independently and collectively:

35.1.1 The voting system shall provide a tactile-input or speech-input device, or both; and

35.1.2 The voting system shall provide a method by which voters can confirm any tactile or

audio input by having the capability of audio output using synthetic or recorded human speech, which is reasonably phonetically accurate; and

35.1.3 The voting system shall provide a means for a voter to change the voter's selection prior to the voter casting the ballot; and

35.1.4 Any operable controls on the input device that are needed for voters without vision shall be discernable tactilely without actuating the keys. As a result, all the buttons on the device do not have to be discernable tactilely, only those buttons that are actually required for the individual to use the "operation without vision" mode; and

35.1.5 Any audio and non-audio access approaches shall be able to work both separately and simultaneously; and

35.1.6 If a non-audio access approach is provided, the system shall not require color perception; the system shall use black text or graphics, or both, on white background or white text or graphics, or both, on black background, unless the office of the Secretary of State approves other high-contrast color combinations that do not require color perception; and

35.1.7 Any voting system that requires any visual perception shall offer the election official who programs the system, prior to its being sent to the polling place, the capability to set the font size to a level that can be read by voters with low vision. While there is no standard font size for this situation, a san-serif font of 18 points as printed on a standard 8.5” x 11” piece of paper will allow the most universal access; and

35.1.8 The voting system shall provide audio information, including any audio output using synthetic or recorded human speech or any auditory feedback tones that are important for the use of the audio approach, through at least one mode (e.g., by handset or headset) in enhanced auditory fashion (i.e., increased amplification), and shall provide incremental volume control with output amplification up to a level of at least 97 decibels Sound Pressure Level (“dB SPL”), with at least one intermediate step of 89 dB SPL; and

35.1.9 For transmitted voice signals, the voting system shall provide a gain adjustable up to a minimum of 20 decibels (“dB”) with at least one intermediate step of 12 dB of gain; and

35.1.10 For the safety of others, if the voting system has the possibility of exceeding 120 dB SPL, then a mechanism shall be included to reset the volume automatically to a safe level after every use (e.g., when handset is replaced) but not before; and

35.1.11 If sound cues and audible information, such as "beeps" are used, there shall be simultaneous corresponding visual cues and information; and

35.1.12 If a non-audio approach is used in conjunction with an audio counterpart, any spoken text shall also be presented on screen. A graphic representation of a ballot with a check, "X," etc. beside a candidate or proposition is allowed; and

35.1.13 All controls and operable mechanisms shall be operable with one hand, including with a closed fist, and operable without tight grasping, pinching, or twisting of the wrist; and

35.1.14 The force required to operate or activate the controls shall be no greater than 5 pounds per square foot (“lb./sq.ft.”); and

35.1.15 If a forward approach by a person in a wheelchair to a voting system is necessary, the

maximum high-forward reach allowed shall be 48 inches (1220 mm) and the minimum low-forward reach shall be 15 inches (380 mm). If the high-forward reach is over an obstruction, reach and clearances shall be as shown in the Figure 1., or otherwise in accordance with the Americans with Disabilities Act Accessibility Guidelines for Buildings and Facilities ("ADAAG"), as written at the time the system is certified for use in the state of Colorado; and

Figure 1.

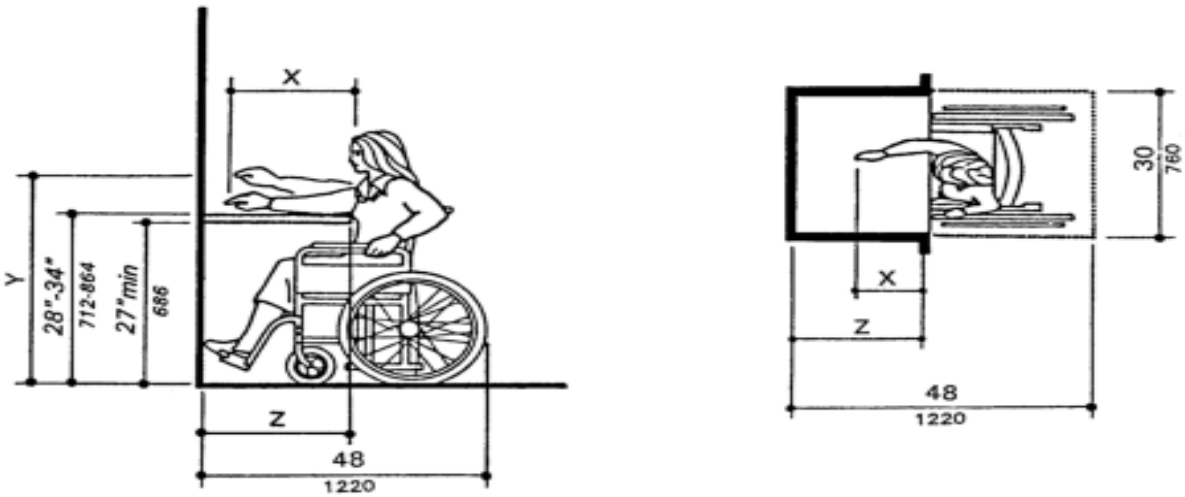

NOTE: x shall be ≤ 25 in(635 mm); z shall be ≥ x. When x < 20 in(510 mm), then y shall be 48 in(1220 mm) maximum. When x is 20 to 25 in(510 to 635 mm), then y shall be 44 in(1120 mm) maximum.

35.1.16 If a side or parallel approach by a person in a wheelchair to a voting system is necessary, the maximum side reach allowed shall be 54 inches (1370 mm) and the low side reach shall be no less than 9 inches (230 mm) above the floor. If the side reach is over an obstruction, reach and clearances shall be as shown in the Figure 2., or otherwise in accordance with the ADAAG, as written at the time the system is certified for use in the state of Colorado; and

Figure 2.

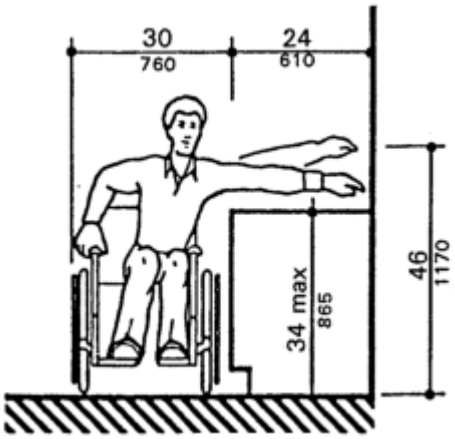

35.1.17 The highest operable part of controls, dispensers, receptacles, and other operable equipment shall be placed within at least one of the reach ranges outlined in paragraphs (15) and (16) of this subsection.

Rule 36. Rules Concerning Notice of Voting System Malfunction Required; Submission of Explanatory Report by Vendor Required Upon Request of Secretary of State

36.1 A vendor (or the political subdivision, if no private vendor supports their system) must give notice to the Secretary of State within 24 hours of a malfunction of its voting/election system (including, but not limited to, software, firmware, hardware, or other equipment) in preparation for and on an election held in this state. The notice may be verbal, but must also be in writing.

36.2 Following the notice, the Secretary of State shall determine whether further information on the malfunction is required. At the request of the Secretary of State, a vendor (or the political subdivision, if no private vendor supports their system) must submit a report to the Secretary of State's office detailing the reprogramming (or any other actions) necessary to correct a voting system malfunction in preparation for and on an election held using the vendor's system. The report shall address whether permanent changes are necessary to prevent similar malfunctions in the future. If the malfunction requires a programming or election setup change to the database or other parts of the voting system, the designated election official shall submit an updated electronic copy of the election system database to the Secretary of State's office as set forth in Rule 11.

36.3 The report shall be submitted within 30 days after the date of the request by the Secretary of State. Notwithstanding the foregoing, if an election is scheduled within 60 days of the date of request by the Secretary of State, the Secretary of State may set an emergency deadline for filing the report. The request may be verbal, but must also be in writing.

36.4 Failure to submit a report within the required period shall be grounds to decertify the system.

36.5 The political subdivision holding the election in which the voting system malfunction occurred may submit the report in lieu of a report from the system's vendor.

36.6 A copy of this report will be attached to the system's most recent certification on file in the Secretary of State's office.

36.7 The Secretary of State's office will distribute a copy of this report to all counties using the voting system in question.

Rule 37. The Acquisition, Purchase or Lease of Voting Systems.

37.1 Declaration of Intent.

37.1.1 The federal Help America Vote Act of 2002 ("HAVA") established uniform voting systems standards used in elections. The following rules seek to conform Colorado requirements to federal HAVA requirements pertaining to voting systems.

37.1.2 Voting systems (including optical scanning voting systems or direct recording electronic systems) certified by the secretary of state and acquired, purchased or leased by counties pursuant to state law shall:

(a) permit the voter to verify (in a private and independent manner) the votes selected by the voter on the ballot before the ballot is cast and counted;

(b) provide the voter with the opportunity (in a private and independent manner) to change the ballot or correct any error before the ballot is cast and counted (including the opportunity to correct the error through the issuance of a replacement ballot if the voter was otherwise unable to change the ballot or correct any error); and

(c) if the voter selects votes for more than one candidate for a single office:

(i) notify the voter that the voter has selected more than 1 candidate for a single office on the ballot;

(ii) notify the voter before the ballot is cast and counted of the effect of casting multiple votes for the office; and

(iii) provide the voter with the opportunity to correct the ballot before the ballot is cast and counted.

(d) Ensure that any notification required under this paragraph preserves the privacy of the vote and the confidentiality of the ballot.

37.1.3 Counties of the State of Colorado that use a paper ballot voting system or a central count voting system (including mail-in ballots and mail ballots), may meet the requirements of this rule by:

(a) establishing a voter education program specific to that voting system that notifies each voter of the effect of casting multiple votes for an office; and

(b) providing the voter with instructions on how to correct the ballot before it is cast and counted (including instructions on how to correct the error through the issuance of a replacement ballot if the voter was otherwise unable to change the ballot or correct any errors).

37.1.4 The voting systems described in the foregoing paragraphs shall produce a record with an audit capacity for such system.

(a) The voting system shall produce a permanent paper record with a manual audit capacity for such system.

(b) The voting system shall provide the voter with an opportunity to change the ballot or correct any error before the permanent paper record is produced.

(c) The paper record produced under subparagraph (a) shall be available as an official record for any recount conducted with respect to any election in which the system is used.

(d) The paper record shall be accessible for individuals with disabilities including non-visual accessibility for the blind and visually impaired, in a manner that provides the same opportunity for access and participation (including privacy and independence) as for other voters.

37.1.5 The voting system shall:

(a) be accessible for individuals with disabilities, including non-visual accessibility for the blind and visually impaired, in a manner that provides the same opportunity for access and participation (including privacy and independence) as for other voters;

(b) satisfy the requirements of paragraph 37.1.5(a) through the use of at least one direct recording electronic voting system or other voting system equipped for individuals with disabilities at each polling place; and

(c) be installed in each polling place in the state by the first federal election held after January 1, 2006.

37.1.6 The voting system shall provide alternative language accessibility pursuant to the requirements of section 203 of the Voting Rights Act of 1965.

37.2 Prohibition of lease, purchase, or acquisition of voting systems pending action by the Election Assistance Commission (EAC) and certification through the Secretary of State..

37.2.1 No voting system may be leased, purchased, or acquired by any county or political subdivision of this state until the EAC and the Secretary of State have promulgated voting systems standards that address these concerns. This rule shall not apply to voting systems that have been certified by the Secretary of State and purchased by the political subdivisions pursuant to state law prior to the effective date of this rule.

37.3 Adoption of April 30, 2002 Voting Systems Standards promulgated by the Federal Election Commission for voting systems.

37.3.1 The Secretary of State hereby adopts the April 30, 2002 Voting Systems Standards promulgated by the Federal Election Commission for voting systems. Therefore, all voting systems, including, but not limited to, optical scan voting systems, direct record electronic voting systems, and touch screens, purchased by the political subdivisions of the State of Colorado are required to meet the qualifications of the Voting Systems Standards promulgated by the Federal Election Commission on April 30, 2002 and be certified by an independent testing authority certified by the National Association of Election Directors until such time, and subsequently thereto, at each time, as the Election Assistance Commission promulgates new Voting Systems Standards.

37.3.2 Upon any revision or new release of Voting Systems Standards by the Election Assistance Commission, the Secretary of State hereby automatically adopts such standards as may be promulgated, and any vendor seeking state certification shall follow such adopted voting systems standards and the processes mandated by state law in order to be certified by the Secretary of State.

37.3.3 Any voting system or equipment submitted to the Secretary of State for certification shall meet the federal voting system standards in effect at the time the voting system or equipment is submitted to the Secretary of State. The adoption of any new or amended voting system standards by the Election Assistance Commission after a voting system or equipment is submitted to the Secretary of State for certification shall not preclude certification or sale of the voting system or equipment under the standards in effect at the time the system or equipment was submitted for certification.

37.3.4 On and after December 13, 2007 (the effective date of the 2005 Voluntary Voting System Guidelines of the Election Assistance Commission), the governing body or designated election official of a political subdivision may purchase any voting system that was previously certified under the 2002 Voting Systems Guidelines.

37.4 The Secretary of State requires all voting systems and all individual parts of voting systems to pass certification criteria as outlined in the State of Colorado Voting Systems Certification Program. The designated election official shall retain records of all certification procedures pertaining to voting systems and parts of voting systems.

Rule 38. Minimum Security Procedures for Transmission of Election Records by Secure, Dedicated Teleprocessing Lines Employed by Vote Centers. See section 1-5-102.7, C.R.S.

38.1 Definitions.

38.1.1 "Vote Center" means a polling place at which any registered elector in the political subdivision holding the election may vote, regardless of the precinct in which the elector resides.

38.1.2 "Teleprocessing Lines" means secure, dedicated communication transmission facilities used for the purpose of transferring Elector Data between Vote Centers and a centralized computerized pollbook maintained by the county clerk and recorder, to ensure the security and integrity of voting information so that no deviation can go undetected.

38.1.3 "Elector Data" means voting information, including but not limited to, voter registration, voting history, and voting tabulations.

38.1.4 "Electronic Pollbook" is a list of eligible electors in electronic format who are permitted to vote at a polling place in an election conducted under the Election Code, which shall be processed by a computer at a Vote Center to be immediately accessible to all other computers at all Vote Centers in the county.

38.2 This Rule applies to each designated election official who transmits election records via Teleprocessing Lines to a centralized Electronic Pollbook maintained by the county clerk and recorder for the purpose of running an election and compiling complete returns. This rule 38 shall only apply to electronic pollbooks used for vote centers.

38.3 Minimum Contingency and Security Procedures

38.3.1 The designated election official shall establish written security procedures covering the transference of Vote Center teleprocessing information.

38.3.2 Such procedures shall include security covering the transmission of Elector Data processed through the Electronic Pollbook and reconciliation of the registration and history of voters casting ballots at a Vote Center.

38.3.3 Such procedures shall include contingency procedures for network and power failure. Such procedures shall at a minimum include procedures to address all single point failures including:

a. Network failure;

b. Power failure that lasts less than one (1) hour; and

c. Power failure that lasts more than one (1) hour.

38.3.4 Acceptable alternatives for addressing such failures include either:

a. A paper backup of the pollbook with the minimum information required to verify a voter's eligibility; or

b. A sufficient number of computers per vote center to ensure that the voter check-in continues in an efficient manner. The computers shall have the ability to function on batteries or an external power source for up to two (2) hours. In addition, each computer shall have an electronic backup of the current pollbook in one (1) of the following formats:

i. A Portable Document File (PDF);

ii. A spreadsheet that is limited to sixty-four thousand (64, 000) lines if in Excel; or

iii. A database with a basic look-up interface.

38.3.5 In addition to acceptable backup pollbook procedures, the security procedures shall address contingency procedures to protect against activities such as voting twice, including but not limited to the use of an affidavit that the voter has not and will not cast another ballot.

38.4 Minimum Standards for Data Encryption

38.4.1 The designated election official shall submit to the secretary of state evidence that the connection to an electronic pollbook is secure including details concerning encryption methodology. In addition, the electronic pollbook shall meet or exceed the following standards. The requirements of this rule shall not apply to counties using the Statewide Colorado Registration and Election (SCORE) system electronic pollbook as the secretary of state shall ensure compliance with the minimum standards for data encryption required by this rule 38.4.

a. Proven, standard algorithms such as DES, Blowfish, RSA, RC5 and IDEA should be used as the basis for encryption technologies.

b. If an electronic pollbook utilizes a Virtual Private Network (VPN), the following shall apply:

1. It is the responsibility of the county to ensure that unauthorized users are not allowed access to internal networks.

2. VPN use is to be controlled using either a one-time password authentication such as a token device or a public/private key system with a strong passphrase.

3. When actively connected to the network, VPNs will force all traffic to and from the PC over the VPN tunnel: all other traffic will be dropped.

4. Dual (split) tunneling is not permitted; only one (1) network connection is allowed.

5. VPN gateways will be set up and managed by the county or its designee.

6. All computers connected to internal networks via VPN or any other technology must use up-to-date anti-virus software.

7. The VPN concentrator is limited to an absolute connection time of twenty-four (24) hours.

8. Only InfoSec-approved VPN clients may be used.

38.5 Minimum Electronic Pollbook Requirements

38.5.1 The designated election official shall adhere to the following minimum procedures and shall include in the security plan, pursuant to section 1-5-616(5), C.R.S., documentation of the county's plan for compliance and assurance that pre-election testing will be conducted. The requirements of this rule shall not apply to counties using the Statewide Colorado Registration and Election (SCORE) system electronic pollbook as the secretary of state shall ensure compliance with the minimum electronic pollbook requirements.

38.5.2 The system shall contain enough bandwidth to handle the processing time, taking into account secured transaction method, for any computer on the system as follows:

a. A maximum of five (5) seconds to update voter credit;

b. A maximum of one and a half (1.5) seconds to process a voter inquiry by identification number; and

c. A maximum of forty-five (45) seconds for session startup and password verification.

38.5.3 The county shall submit in the security plan the system data transfer requirements to completely process a single voter record. This shall include at a minimum the following:

a. The data stream information on both send and receiving data for all points of the transaction until the transaction is complete;

b. Information on all points where the connection is closed and the data stream released between the remote computer and the server; and

c. The proposed method of securing transmissions across public networks.

38.5.4 The county shall submit in the security plan a detailed list of all vote centers, with a proposed number of workstations connecting to the database and the proposed connection (including bandwidth and security) for each location.

38.5.5 Electronic Pollbook Pre-Election Testing Procedures

38.5.5.1 The Electronic pollbook application shall be tested to ensure that it meets the minimum system requirements prior to the first election in which it is used.

a. The application shall also be tested after the implementation of any system modifications. The county shall indicate in the subsequent security plan whether such retesting has occurred.

38.5.5.2 The test shall, at a minimum, include the following:

a. A load test shall be demonstrated through either sixty percent (60%) of actual computers running at proposed bandwidth and security settings, or by simulating a load test with commercial-off-the-shelf ("COTS") technology designed for load testing such as Mercury;

b. A contingency/failure test shall be demonstrated and documented illustrating the effects of failures identified in Rule 38.3.3; and

c. All tests shall be conducted with clients and servers in normal, typical, deployed operating mode.

38.5.5.3 All records and documentation of the testing shall be retained by the designated election official for a period of twenty-five (25) months as part of the election record pursuant to section 1-7-802, C.R.S. The testing record and documentation shall include but is not limited to the following:

a. A formal test plan containing all test scripts used;

i. The test plan shall include test environment containing make, model, type of hardware and software versions used in testing.

ii. The test plan shall also include the number of client computers, servers, and physical locations involved in testing.

b. Test logs of all events that were observed during testing including:

i. The sequence of actions necessary to set up the tests;

ii. The actions necessary to start the tests;

iii. The actions taken during the execution of the tests;

iv. Any measurements taken or observed during the tests;

v. Any actions necessary to stop and/or shut down the tests;

vi. Any actions necessary to bring the tests to a halt; and

vii. Any actions necessary or taken to deal with anomalies experienced during testing.

c. Performance logs and reports taken from both server(s) and workstation(s) during the testing which contain performance information of:

i. Network usage (bandwidth);

ii. Processor utilization;

iii. Random Access Memory (RAM) Utilization; and

iv. Any additional performance monitoring reports necessary to explain the process taken and to support the findings of the tests.

d. All test logs shall contain date, time, operator, test status (or outcome), and any additional information to assist the secretary in making a determination.

38.6 Minimum Number of Computers Required for a Vote Center

38.6.1 Counties shall allocate computers to their vote centers based upon the following minimum requirements. Voter registration numbers shall be calculated based upon the total number of registered voters in the county ninety (90) days preceding the election. The minimum computers required shall be on-site at each vote center. For primary or coordinated elections, counties shall allocate no less than 2 on-site computers at each vote center with the exception provided in this Rule 38.6.1 (A). This Rule 38.6 shall not apply to early voting.

a. Counties with fewer than ten thousand (10,000) registered voters shall allocate a minimum of two (2) computers to each vote center, except that a county with fewer than ten thousand (10,000) registered voters may allocate a single computer to each vote center so long as the county has established paper backup contingency procedures of the pollbook with the minimum information required to verify a voter's eligibility.

b. Counties having at least ten thousand (10,000) but fewer than twenty-five thousand (25,000) registered voters shall allocate a minimum of three (3) computers to each vote center.

c. Counties having at least twenty-five thousand (25,000) but fewer than fifty thousand (50,000) registered voters shall allocate a minimum of thirty-two (32) computers to be dispersed as equally as possible among all vote centers.

d. Counties having at least fifty thousand (50,000) but fewer than seventy-five thousand (75,000) registered voters shall allocate a minimum of sixty-three (63) computers to be dispersed as equally as possible among all vote centers.

e. Counties with more than seventy-five thousand (75,000) registered voters shall allocate a minimum of ninety-five (95) computers to be dispersed as equally as possible among all vote centers.

38.6.1.1 A county may submit to the secretary of state an alternate plan establishing the number of computers allocated to each vote center. Such alternate plan shall:

- Establish the reason(s) for proposed computer allocation and provide statistical information based on historical voter turnout at each vote center;
- Provide information relating to population centers within the county; and
- Include other relevant information, as necessary.

In no event shall an alternate plan be submitted to the secretary of state unless the minimum amount of computers allocated by a county is equal to or greater than the minimum number of computers established in this Rule and there are no less than two (2) computers allocated to each vote center except for the requirements established in Rule 38.6.1 (A).

38.7 Written procedures and reports required by this Rule 38 shall be submitted to the Secretary of State and received by that Office for approval no later than sixty (60) days before the election date. The Secretary of State shall either approve the procedures submitted or notify the designated election official of recommended changes.

38.8 If the Secretary of State rejects or approves the written procedures, the Secretary of State shall

provide written notice of such rejection/approval, including specifics of non-compliance with this Rule, within fifteen (15) days of receiving the written procedures.

38.9 If the Secretary of State rejects the written procedures, the designated election official shall submit a revised procedure within fifteen (15) days thereafter.

38.10 The Secretary of State shall permit the filing of the revised procedures at a later date if it is determined that compliance with the fifteen day requirement is impossible.

38.11 All reconciliations must be accomplished prior to canvassing board certification of final results and shall be certified by the canvassing board. The certification of reconciliation shall be filed with the Secretary of State at the time the canvassing board certification of official election results is filed.

38.12 Where the Elector Data is transmitted via Teleprocessing Lines for the purpose of combining with other such tabulations to produce complete returns, the designated election official shall establish procedures to reconcile received transmitted tabulations so that no deviation can go undetected.

38.13 Prior to January 1, 2008, election judges shall make one certificate for each Vote Center in the form required by section 1-7-601, C.R.S.

38.14 Certificate of Reconciliation

(a) In addition to the statutory form required by section 1-7-601, C.R.S., the election judges for each vote Center shall submit a certification of reconciliation in substantially the following form:

During the ____ Election held in _____ County on _____ 20___, Elector Data was transmitted using dedicated Teleprocessing Lines. The canvassing board hereby certifies that the reconciliation procedures required by Rule 38.11, Minimum Security Procedures for Transmission of Election Records by Dedicated Teleprocessing Lines in Vote Centers has been complied with.

(b) The Certification of Reconciliation must be signed and dated by the designated election official.

38.15 After January 1, 2008, reconciliation shall consist of race-by-race comparison by precinct of the received tabulation to a tabulation report produced from the original tabulations sent from the precinct to those received at the Vote Center. All tabulation reconciliations must be accomplished prior to canvassing board certification of final results and shall be certified by the canvassing board. This certification of reconciliation shall be filed with the Secretary of State at the time the canvassing board certification of official election results is filed.

Rule 39. Cancellation of Felons' Voter Registrations

39.1 Upon being provided information concerning felony convictions and pursuant to section 1-2-302(3.5)(b), C.R.S., the Secretary of State shall direct the cancellation of the registration of persons convicted of a felony who are serving a sentence of confinement or detention or are on parole.

39.1.1 This rule does not pertain to a felon serving a period of probation.

39.2 The Secretary of State shall compare the felony conviction data with the Secretary of State's voter registration database to match voter registration information with the individuals listed using

the following criteria:

(1) The last name and first name of each individual,

(2) The date of birth,

(3) The social security number or last four digits (if provided).

39.2.1 Any confirmed match of the last name and first name of the individual and the date of birth, the social security number, or at least the last four digits, will be considered adequate cancellation criteria.

39.2.2 The county clerk and recorder shall send written notice to all individuals cancelled pursuant to this rule advising the individual that his or her voter registration has been cancelled. The felon notification of cancellation letter shall be in a format approved by the Secretary of State, and shall be mailed to the last known mailing address as shown on the clerk and recorder's records.

39.3 For any confirmed matches of convicted felons found pursuant to Rule 39.2, such matches shall be provided to the county clerk and recorder of the county of residence of the individual as recorded in the Secretary of State voter registration database to be cancelled pursuant to sections 1-2-302(3.5)(b) and 1-2-103(4), C.R.S.

39.4 Each county clerk shall solicit a listing of individuals convicted of a felony from the county sheriff of their respective counties.

39.4.1 Such lists shall be obtained at least once a month throughout the year. During any month in which an election occurs, such lists shall be obtained up to and including the day prior to the election.

39.4.2 The registrations of confirmed matches of individuals on the lists furnished by the county sheriffs shall be cancelled under the criteria set forth in Rule 39.2.

Rule 40. Rules Concerning Certification and Education of Designated Election Officials

40.1 Purpose:

40.1.1 The Secretary of State Recognizes that the oversight of elections is a profession that requires thorough knowledge of complex state and federal election law and election procedures. It is recognized that state and federal law, voting equipment and election procedures, and therefore necessitates extensive training. The purpose of the certification program is to standardize election procedures and education so that Colorado voters have a greater confidence in their election officials and the election process.

40.2 Advisory Board created

40.2.1 The Secretary of State shall create an advisory board to oversee the certification program and curriculum. The advisory board shall meet at least twice each calendar year to approve the curriculum and make necessary changes. The advisory board shall also review evaluations and recommend changes to the certification program.

40.2.2 The advisory board shall review individual applications for certification and shall approve applications that are accurate and complete. The advisory board shall have the authority to take into account special circumstances in reviewing and approving

applications.

40.2.3 The advisory board shall include the following members appointed by the Secretary of State:

(a) Four county clerks or designated staff members

(b) Two Secretary of State Office representatives

(c) Any individual(s) whom the Secretary of State believes could make a valuable contribution to the Board.

40.2.4 Board members shall be appointed by the Secretary of State to serve a two-year term. Board members may be terminated without cause. Failure to attend meetings or meaningfully contribute may result in termination.

40.3 Core Curriculum

40.3.1 The certification program shall include core requirements. All training outlined herein shall be provided under the direction of the Secretary of State. Persons applying for certification shall complete at least eight core classes. The core classes shall generally include but are not limited to:

(a) The basic conduct of elections

(b) Testing and maintenance of voting equipment

(c) Canvass procedures

(d) Mail-in voting

(e) Pollworker training and recruiting

(f) SCORE training

(g) Ethics

(h) Accessibility for people with disabilities

(i) Provisional Voting

40.3.2 The classes may be offered as a whole or in sections.

40.4 Elective Curriculum

The certification program shall include electives as part of the certification program. All training outlined herein shall be provided under the direction of the Secretary of State. Persons applying for certification shall select and complete at least six (6) elective courses. The elective courses shall generally include but are not limited to:

(a) Voter Outreach

(b) Media Relations

(c) Elections refresher course

(d) Petitions

(e) Overseas and military voters

(f) Campaign finance

(g) Security planning

(h) Issues in voter registration

(i) Polling place set up/management

(j) Vote Center training

(k) Mail ballot training

(l) Budgeting

(m) Recounts and election contests

(n) Other timely, relevant topics as determined by the Secretary of State

40.5 The advisory board may reject applications for certification if any of the eight (8) core and six (6) elective credit requirements have been achieved through a duplication of course credits.

40.6 Credit for Other Trainings. Persons may apply to the advisory board to request credit towards Colorado certification for training provided by other agencies or organizations. The Board may grant core or elective hours for such trainings.

40.7 Continuing Elections Education (CEE). In order to maintain certification, a person shall attend and complete at least two electives or one core class every calendar year.

40.8 Completing Colorado certification

40.8.1 After a person has completed the requirements for certification, the person shall submit an application for Colorado certification to the Secretary of State's office.

40.8.2 The Secretary of State shall create an application form to be used by applicants for certification following completion of coursework. The applicants shall provide the following information:

(a) the applicant's name, name of county jurisdiction, address, telephone and e-mail;

(b) the applicant title(s) and date(s) of the classes the applicant attended;

(c) the applicant's signature and date signed; and

(d) the supervisor's signature (if applicable)

40.8.2.1 The form shall also include a section for Secretary of State office use only.

40.8.3 The Secretary of State shall review the application with reference to the Secretary of State records. If the application is complete and accurate, the Secretary of State shall forward it to the advisory board for its review and approval. Upon approval by the advisory board, the Secretary of State shall issue a certificate that the person is a Certified Colorado Election Official.

40.8.4 The Secretary of State shall track attendance at all classes and keep records of attendance, continuing elections education, and records of those persons who are certified and persons who are in the certification process.

40.9 De-certification

40.9.1 The Secretary of State has the authority to de-certify any person who does not fulfill the continuing elections education requirements.

40.9.2 If a certified election official fails to satisfy continuing elections education requirements in one (1) calendar year, then the election official shall have a maximum of twelve (12) months to complete continuing education requirements for the previous calendar year and the current calendar year.

40.9.3 Failure to satisfy continuing education requirements for two (2) consecutive years shall result in de-certification.

40.10 Credit for Teaching Classes

40.10.1 A person who teaches a class and/or persons who substantially assist with preparation for the class as part of the certification shall receive the equivalent of two core credits, or three elective credits. The participant shall submit a written request to the secretary of state's office requesting credit for either two core credits or three elective credits. The advisory board shall determine which persons are eligible for these credits.

40.11 Future regional and web-based training

40.11.1 It is the intent of this rule that the Secretary of State and the advisory board develop regional trainings to make certification and training more accessible. It is the intent that the Secretary of State explore virtual and web-based training for use as part of the certification and education process.

Rule 41. Rules Concerning Canvassing

41.1 Definitions

(a) "Canvass" shall mean the audit function of the election and the process of reconciling the number of ballots counted to the number of voters who voted. The canvass also includes the process of reconciling detailed ballot logs and Statement of Ballot Forms.

(b) "Canvass workers" shall mean workers appointed or hired by the designated election official to assist in the preparation and conduct of the canvass.

(c) "Statement of Ballot Forms" shall mean the form used at the polling location pursuant to sections 1-7-505(2) and 1-7-601(2), C.R.S., that accounts for all ballots at that location. The form includes information required by this rule.

41.2 Detailed Ballot Log

41.2.1 The designated election official shall keep a detailed log of all ballots. The designated election official shall begin the log as soon as ballots are ordered and received. The log shall include the polling location and/or precinct number(s), ballot style(s), and account for every ballot that is received and distributed. The detailed ballot log shall be

reconciled at the conclusion of each workday.

41.2.2 The designated election official shall keep and reconcile daily logs of mail-in, mail and early voting ballots.

41.2.3 The designated election official shall indicate in the detailed log the number of paper ballots that are sent to each polling location for use on election day.

41.2.4 All required logs may be kept either by electronic or manual means.

41.3 Election Day Tracking Process

41.3.1 The designated election official shall supply each polling location with a Statement of Ballots Form. Combined precincts may use one form. The form shall include a place for the judges to account for the following information:

(a) The name or number(s) of the precinct or vote center;

(b) The number of ballots provided to the polling location;

(c) The number of ballots cast;

(d) The number of unvoted ballots

(e) The number of damaged or spoiled ballots; and

(f) The number of voted provisional ballots.

41.3.2 The total number of voted ballots should be reconciled to the number of voters who voted.

41.3.3 The total number of voted ballots, spoiled or damaged ballots, provisional ballots and unvoted ballots should be reconciled to be the same as the number of total ballots received at the polling location before voting begins.

41.3.4 The designated election official shall ensure that the total of the number of people who signed the pollbook is reconciled to the total of the number of ballots cast.

41.3.5 If there is a discrepancy in the numbers on the Statement of Ballots form, the judge shall make written notation explaining why the numbers do not balance (for example, voter signed in but left the polling place without voting, etc.).

41.3.6 The judges shall return the completed Statement of Ballots form to the designated election official with the other precinct supplies and mail a duplicate copy pursuant to section 1-7-505, C.R.S.

41.4 Designated Election Official's Disposition of Forms

41.4.1 The designated election official shall review the Statement of Ballots form and ensure that it is complete and correct.

41.4.2 If the designated election official or the canvass board discovers a problem with the Statement of Ballots form that cannot be easily resolved, he or she shall have the right to contact the election judges and ensure that the discrepancy is explained or corrected.

41.5 Procedures for the Day of the Canvass

41.5.1 In order for the canvass board established pursuant to section 1-10-101, C.R.S., to perform its duties, pursuant to section 1-10-101.5, C.R.S., the designated election official shall provide the following information:

(a) The name of each candidate receiving votes, the office, and the total number of votes received;

(b) The number/letter of each ballot issue or question and the votes received;

(c) The number of voters who voted early;

(d) The number of mail-in or mail ballots cast, including the number accepted and rejected;

(e) The number of provisional ballots counted.

41.5.2 The canvass board shall confirm that the number of ballots cast is less than or equal to the number of people who actually voted in each precinct or vote center.

41.5.3 The designated election official shall use a canvass form that is approved by the Secretary of State.

41.5.4 Any written documentation regarding official numbers shall be included as part of the canvass.

41.6 Official Abstract

41.6.1 The designated election official shall ensure that the number of active voters on election day pursuant to section 1-10-105(5)(c), C.R.S., is the number used on the official abstract.

41.6.2 The official abstract shall be compiled on a format approved by the Secretary of State.

41.6.3 The official abstract shall include, by precinct/ballot style or vote center, where applicable:

(a) The statement of votes counted by race and ballot question or issue;

(b) The total active registered electors in the precinct and the total for the jurisdiction holding the election;

(c) The total number of electors voting in each precinct, and the total for the jurisdiction holding the election;

(d) The number of voters who voted early;

(e) The number of emergency registrations;

(f) The number of mail-in or mail ballots counted and the number rejected;

(g) The number of provisional ballots counted and the number rejected listed by each rejection code pursuant to Rule 26.5.4; and

(h) The number of damaged and spoiled ballots.

41.7 The Abstract shall be the Official, Permanent Record.

41.7.1 The designated election official shall keep all official canvass reports and forms as part of the official permanent election record.

41.8 Appointment of Canvass Workers

41.8.1 The designated election official may utilize canvass workers to assist in the preparation and conduct of the canvass.

41.9 Voter History

41.9.1 After the canvass process is completed, the designated election official shall give credit to each voter who votes by mail, at an early voting site, or at a polling location.

41.9.2 If the voter history records do not match the number of voters who voted at that election, the designated election official shall ensure the following:

(a) Each voter was given credit for voting; and

(b) All pollbooks and signature cards are accounted for.

41.9.3 All research concerning discrepancies shall be explained and documented.

41.10 Written Complaints. In accordance with section 1-7-514(2)(b), C.R.S., the designated election official shall provide to the canvass board any written complaint about a voting device submitted by a registered elector, and, if resolved, how it was resolved and if pending, a proposal for how the issue will be resolved.

Rule 42. Rules Concerning Use of Facsimile for Administrative or Medical Emergency Outside of the UOCAVA Context.

42.1 Pursuant to section 1-8-115, C.R.S., the designated election official may use means of electronic transfer to provide a mail-in ballot to the eligible elector for an administrative or medical emergency following the procedures outlined in section 1-8-115 C.R.S., and this rule.

42.2 "Electronic Transfer" shall mean the use of facsimile and shall not include the use of e-mail under section 1-8-115, C. R. S.

42.3 If a mail-in ballot is delivered to an elector by facsimile transmission, the elector may return the ballot by facsimile transmission.

42.4 Mail-in ballots sent by facsimile transmission shall include all races, ballot issues, and questions on which the elector may vote. Counties are encouraged to work with their vendors to develop a ballot that is clearly legible to the elector to increase the readability of the ballot and to avoid possible misinterpretations of the elector's intended choice because of poor transmission of the document.

42.5 Instructions faxed to the elector with the ballot shall include the following information:

(a) The name of the elector;

(b) The recipient's fax number;

(c) The total number of pages to be transmitted;

(d) The total number of ballot pages;

(e) The telephone number or e-mail address where the eligible elector may send questions regarding the ballot;

(f) A notice that the recipient shall not duplicate the ballot for any other voter;

(g) The fax number where the eligible elector may return their completed ballot.

(h) Return address information for the designated election official and instructions to mark, "official ballot enclosed" on the elector's return envelope;

(i) A notice that the ballot must be received by the designated election official by mail, hand delivery or received by fax no later than 7:00 p.m. Mountain Standard Time on election day; and

(j) Instructions for returning the medical/administrative emergency form.

(k) A notice that the ballot will not be a confidential ballot.

42.6 The transmission shall also include a mail-in ballot self-affirmation pursuant to 1-8-114 (1) C. R. S.

42.7 The fax transmission log as well as any other fax record shall be part of the official election record.

42.7.1 A Fax Transmission log shall be maintained by the designated election official of each ballot sent to a voter by facsimile indicating:

(a) The name of the voter;

(b) The fax number to which the ballot was sent;

(c) The unique identification number of the faxed ballot;

(d) The date the ballot and instructions were faxed; and

(e) The initials of the designated election official's employee sending the fax.

42.8 The designated election official shall fax the blank ballot with the instructions to the fax number provided by the elector. If the transmission is unsuccessful, the designated election official shall attempt to fax at least two more times and make reasonable effort, if possible, to ensure the transmission was successful.

42.9 Upon receipt of the ballot, when the information from the signed affidavit has been verified, a bipartisan team of judges shall duplicate the ballot. Duplicating judges shall not reveal how the elector has cast his or her ballot.

42.10 Medical Emergency

42.10.1 For purposes of section 1-8-115(1)(a), C.R.S., "second degree" is defined as spouse,

parents, children, brothers and sisters, grandparents, and grandchildren related by blood or marriage.

42.10.2 For the purposes of section 1-8-115(1)(a), C.R.S., the "last day to apply for a mail-in ballot" is defined as the last day to apply for a ballot by mail in accordance with section 1-8-104(3), C.R.S.

42.11 Administrative Emergency. If the designated election official is unable to provide a mail-in ballot to an elector by any other means, the designated election official shall seek authority from the Secretary of State to provide a mail-in ballot to the elector pursuant to section 1-8-115(4), C.R.S., using fax transmission.

42.11.1 This Rule 42.11 shall apply only to eligible electors who are properly registered and have timely filed a mail-in ballot application.

42.11.2 The Secretary of State shall designate a point of contact for each election for Emergency Electronic Transfer Requests no later than twenty-one (21) days prior to an election. The Secretary of State shall notify the counties by e-mail who the designated point of contact shall be, and post the contact information for the designated point of contact on the Secretary of State's website.

42.11.3 The designated election official shall submit the request in writing from the Secretary of State using the Emergency Electronic Transfer form. E-mail is the preferred method of communication. If possible, the designated election official shall attempt to consolidate requests to the Secretary of State.

42.11.4 The form for requesting an emergency electronic transfer shall be posted on the Secretary of State's website. The form must contain the following information:

(a) Contact information, including name, address, phone number, fax number, and e-mail address for the designated election official or their designee;

(b) Date and time of request sent by designated election official;

(c) Confirmation e-mail to designated election official by Secretary of State upon receipt of request

(d) Justification as to why the ballot(s) need to be sent by fax, which includes the following required information:

(1) The elector's name;

(2) When the elector applied for the mail-in ballot;

(3) The date when the designated election official sent the mail-in ballot to the elector (if applicable);

(4) The date the elector contacted the designated election official with information regarding failure to receive the ballot;

(5) A suggested timeframe for the Secretary of State to respond;

(6) The quantity of ballots to be sent by fax; and

(7) Approval or disapproval by the Secretary of State; if denied, reason for the

denial.

(e) Confirmation e-mail from the designated election official to Secretary of State upon receipt of approval or disapproval.

42.11.5 The Secretary of State shall respond in writing to the designated election official as soon as possible, but no later than eight (8) business hours after receipt of the request.

42.11.6 The Secretary of State shall have the ability to issue a blanket approval by electronic transfer.

42.12 Timeliness of filing applications for emergency mail-in ballots

42.12.1 Requests for emergency mail-in ballots issued for medical reasons pursuant to Section 1-8-115(1)(a), C.R.S. must be received by the designated election official no later than 5:00 p.m. on the day of election.

42.12.2 Requests for emergency mail-in ballots issued for administrative reasons pursuant to Section 1-8-115(2), C.R.S. must be received by the designated election official no later than 7:00 P.M. on the day of the election.

42.12.3 Requests for emergency mail-in ballots shall not be processed if the request is received after the required deadline.

Rule 43. County Security Procedures

43.1 Definitions

43.1.1 "Chain of custody log" shall, for the purposes of this rule mean a written record that shows that the equipment and all associated data are secured according to these procedures and in the documented control of an employee or deputized election judge through the entire time of ownership by the jurisdiction.

43.1.2 "Continuous video security surveillance recording" shall, for the purposes of this rule, mean video monitoring by a device which continuously records a designated location. Alternatively, this definition may be met by the use of a "non-continuous" recording, provided that a device is used which samples the functionality of the video recorder without interruption, evaluates the detector response at least once every 15 seconds, and computes and records the average value at least every 60 seconds, except during allowable periods of calibration.

43.1.3 "DRE" means a direct recording electronic voting device. A DRE is a voting device that records votes by means of a ballot display provided with mechanical or electro-optical components or an audio ballot that can be activated by the voter; that processes data by means of a computer program; and that records voting data and ballot images in memory components or other media. The device may produce a tabulation of the voting data stored in a removable memory component and as printed copy. The device may also provide a means for transmitting individual ballots or vote totals to a central location for consolidating and reporting results from remote sites to the central location.

43.1.4 "Employee" shall, for the purposes of this rule, mean all full-time, part-time, permanent and contract employees of the county who have had a criminal history check conducted in accordance with Rule 11.2 and are deputized by the county clerk and recorder to

prepare or maintain the voting system or election setup materials, staff the counting center and who have any access to the electromechanical voting systems or electronic vote tabulating equipment.

43.1.5 "Removable card or cartridge" shall, for the purposes of this rule, mean all programming cards or cartridges except voter activation cards that store firmware, software or data.

43.1.6 "Trusted Build" means the write-once installation disk or disks for software and firmware for which the Secretary of State or his/her agent has established the chain of evidence to the building of a disk, which is then used to establish and/or re-establish the chain of custody of any component of the voting system which contains firmware or software. The trusted build is the origin of the chain of evidence for any software and firmware component of the voting system.

43.2 Pursuant to section 1-5-616(5), C.R.S., each county shall file with the Secretary of State a security plan that meets or exceeds the standards set forth in this rule. The plan filed with the Secretary of State in accordance with this rule shall provide a point by point detailed response with a proposed solution to each of the requirements set forth in this rule.

43.3 The county shall file security procedures annually no later than sixty (60) days prior to the first election in which the procedures will be used.

43.4 If no changes have occurred since the last security procedures filed, the county shall file a statement to that effect.

43.5 Revisions to previously filed security procedures shall clearly state which part of the procedures previously filed have been revised.

43.6 Each designated election official may change the security procedures within sixty (60) days of an election as a result of an emergency situation or other unforeseen circumstance, and document any changes. The designated election official shall file any revisions with the Secretary of State within five (5) days of the change.

43.7 If, pursuant to section 1-5-616(5)(b), C.R.S., the Secretary of State is unable to complete its review, the procedures or revisions shall be temporarily approved until such time as the review is completed. The Secretary of State shall notify the county of temporary approval.

43.8 Security Procedures shall at a minimum include, if applicable:

43.8.1 General Requirements:

a. At all times removable memory cards and cartridges shall be handled in a secure manner as follows. When not sealed in voting machines, all removable cards and cartridges shall be transferred and stored in secure containers with at least one tamper-evident seal with printed serial numbers. The integrity and serial number of each seal shall be verified by election judges or county personnel at shipping and receiving locations.

b. All documentation of seals, chain of custody, and other documents related to the transfer of equipment between parties shall be maintained on file by the county clerk and recorder and is subject to inspection by the Secretary of State.

c. The chain of custody for each voting device must be maintained and documented throughout ownership or leasing of the device by the county clerk and recorder.

d. Only deputized clerks, election judges, or canvass board members sworn under oath are allowed to handle ballots, which include V-VPAT records.

e. No additional or modified software developed by the Vendor that is not specifically listed on the Secretary of State's certificate and verified against the state trusted build shall be installed on any component of the voting system. Nothing in this rule shall preclude the use of commercial off-the-shelf-software, provided that the COTS software is included in the certified list of services and executables for the certified voting systems.

f. Any form or log containing "date" means to note the month, calendar day, year, hour, minute, and whether the time is a.m. or p.m.

43.8.2 Physical Locking Mechanisms and Seals

a. DREs. all DRE voting devices shall have industry standard, commercial off the shelf tamper-evident seals with printed, unique serial numbers affixed as follows:

i. A seal shall be placed over any removable card or cartridge that is inserted into the unit, or over the slot or door covering the card or cartridge.

ii. A seal is to be placed over any removable card or cartridge slot when no card or cartridge is inserted into the unit.

iii. Tamper-evident, numbered seals shall be affixed across the seam at which the two sides of the case of the electronic components of the voting unit join, with at least one seal for each of the four sides of the device.

iv. If the voting device contains one or more slots for a flash memory card, a seal shall be affixed over each flash card or each flash card slot, door, or access panel.

v. These same procedures also apply to the Judge's Booth Controller (JBC) unit for the Hart InterCivic System.

vi. All seals are to be verified by two employees or election judges.

b. V-VPATs. all V-VPAT units shall be sealed upon verification of no votes having been cast on the paper record prior to being attached to a specific voting device. Seals must be verified as being intact by at least two election judges prior to the start of voting, and at the close of voting. V-VPAT records shall either remain in the V-VPAT canister, or be sealed and secured in a suitable device for protecting privacy or as described in Election Rule 11.

c. Remote or Central-count Optical Scanners. Optical scanners used in a remote or central tabulating location shall have tamper-evident seals as follows:

i. A seal is to be placed over each card or cartridge inserted into the unit, or over any door or slot containing the card or cartridge.

ii. A seal is to be placed over each empty card or cartridge slot or door covering the area where the card or cartridge is inserted.

ii. Prior to the start of voting and after the close of voting, all seals are to be verified as being intact by two employees or election judges.

d. Memory Cards/Cartridges. Each removable card or cartridge shall have a permanent serial number assigned and securely affixed to it. The manufacturer assigned serial number may be utilized for this purpose.

e. The county clerk and recorder shall maintain a written or electronic log that records which card or cartridge and which seal number is assigned to each voting unit. Any breach of control over a card/cartridge or door or slot for a card/cartridge before an election shall require that the county clerk and recorder be notified and follow the procedures specific to the incident as described in section 43.8.11 of this Rule.

43.8.3 Individuals With Access to Keys, Door Codes, and Vault Combinations

43.8.3.1 Counties are required to state the positions and dates of CBI background check for employees with access to the areas addressed in this Rule 43.8.3.

43.8.3.2 For all counties, use of keypad door codes or locks, vault combinations, computer and server passwords, encryption key codes, and administrator passwords shall be changed at least once per calendar year prior to the first election of the year. Only employees may be given access to such codes, combinations, passwords, and encryption keys, pursuant to the following limitations. Counties may request a variance from the Secretary of State for the requirements set forth in this Rule 43.8.3 only in extreme circumstances.

43.8.3.3 The requirements for an employee to be given access to a code, combination, password, or encryption key are as follows:

a. Access to the code, combination, password, or encryption key for the storage area for voting equipment and the mail-in ballot counting areas shall be restricted to employees as defined in Rule 43.1.4.

b. Access to the code, combination, password, or encryption key for the mail-in ballot storage area and counting room or tabulation workstations shall be restricted to ten (10) employees as defined in Rule 43.1.4.

c. Except for emergency personnel, no other individuals shall be present in these locations unless supervised by one or more employees as defined in Rule 43.1.4.

i. Each individual who has access to the central election management system or central tabulator shall have their own unique username and password. No individual shall use any other individual's username or password. Shared accounts shall be prohibited.

ii. The county shall maintain a log of each person who enters the ballot storage room, including the person's name, signature, and date and time of entry. If access to the ballot storage room is controlled by use of key card or similar door access system that is capable of producing a printed paper log including the

person's name and date and time of entry, such a log shall meet the requirements of this rule.

43.8.3.4 Computer room access shall be limited to employees and election judges only, and the delivery of ballots between the preparation room and computer room shall be performed by messengers or runners wearing distinguishing identification.

43.8.4 Temperature-controlled Storage

43.8.4.1 Counties shall attest to the temperature-control settings used with the following components of a voting system. Information submitted to the Secretary of State shall indicate the specifics for each type of component, as well as the specific environment used, which may include, but is not limited to controlled offices, controlled vaults, and controlled warehouses. The settings for temperature control must be at least the following:

a. Servers and Workstations. Servers and workstations shall be maintained in a temperature-controlled environment. Maximum temperature shall at no time exceed 90 degrees fahrenheit.

b. DREs. DREs shall be maintained in a temperature-controlled environment. The temperature settings shall be maintained at a minimum of 60 degrees fahrenheit and a maximum of 90 degrees fahrenheit.

c. Optical Scanners. Optical scanners shall be maintained in a temperature-controlled environment. The temperature settings shall be maintained at a minimum of 50 degrees fahrenheit and a maximum of 90 degrees fahrenheit.

d. V-VPAT Records. In addition to the requirements set forth in Rule 11, V-VPAT records shall be maintained in a temperature-controlled environment. The temperature settings shall be maintained at a minimum of 50 degrees fahrenheit and a maximum of 80 degrees fahrenheit. V-VPAT records shall also be maintained in a dry environment, with storage at least 4 inches above the finished floor, for a period of 25 months following the election. The humidity of the environment shall not exceed 80% humidity for a period of more than 24 hours. V-VPAT records shall be stored in a manner that prevents exposure to light, except as necessary during recounts and audits.

e. Paper Ballots. Paper ballots shall be maintained in a dry, humidity-controlled environment. The humidity of the environment shall not exceed 80% humidity for a period of more than 24 hours. Additionally, paper ballots shall be stored at least 4 inches above the finished floor, for a period of twenty-five (25) months following the election.

f. Video Data Records. Video data records shall be maintained in a dry, temperature-controlled environment. The humidity of the environment shall not exceed 80% humidity for a period of more than 24 hours. Temperature settings shall be maintained at a minimum of 40 degrees fahrenheit and a maximum of 80 degrees fahrenheit. Additionally, video data records shall be stored at least 4 inches above the finished floor, for a period of twenty-five (25) months following the election.

43.8.5 Security Cameras or Other Surveillance

43.8.5.1 Unless otherwise instructed, continuous video security surveillance recordings of specified areas shall be made beginning at least sixty (60) days prior to the election and continuing through at least thirty (30) days after the election, unless there is a recount or contest. If a recount or contest occurs, the recording shall continue through the conclusion of all such activity. The following are the specific minimum requirements:

a. Counties over 50,000 registered voters shall make continuous video security surveillance recordings of the following areas:

i. All areas in which election software is used, including but not limited to programming, downloading memory cards, uploading memory cards, tallying results, and results reporting.

ii. All areas used for processing mail-in ballots, including but not limited to areas used for Signature Verification, tabulation, or storage of voted ballots beginning at least thirty-five (35) days prior to the election and continuing through at least thirty (30) days after the election, unless there is a recount or contest. If a recount or contest occurs, the recording shall continue through the conclusion of all such activity.

iii. The storage area for all voting equipment.

b. Counties under 50,000 registered voters shall make continuous video security surveillance recordings of the following areas:

i. All areas in which election software is used, including but not limited to programming, downloading memory cards, uploading memory cards, tallying results, and results reporting.

43.8.6. Equipment Maintenance Procedures

43.8.6.1 In addition to the requirements for voting systems specified in Rule 11, the following minimum standards shall be adhered to:

a. All equipment shall be stored throughout the year with serially-numbered, tamper-evident seals over the memory card slots for each device. The county shall maintain a log of the seals used for each device consistent to the logs used for tracking Election Day seals.

b. For equipment being sent to the vendor for offsite repairs/replacements, the county must maintain a log file for the device that shall contain the following: the model number, serial number, and the type of device; the firmware version; the software version (as applicable); date of submission to the vendor.

c. For equipment receiving maintenance on-site by the vendor, the county shall verify that a CBI background check has been conducted on all vendor personnel with access to any component of the voting system. CBI information shall be updated and maintained on file annually. Additionally, the vendor's representative shall be escorted at all times by an employee while on-site. At no time shall the voting system vendor

have access to any component of the voting system without supervision by an employee.

d. Upon completion of any maintenance, the county shall verify or reinstate the trusted build and conduct a full acceptance test of equipment that shall, at a minimum, include the Hardware Diagnostics test, as indicated in Rule 11, and conduct a mock election in which an employee shall cast a minimum of ten (10) ballots on the device to ensure tabulation of votes is working correctly. All documentation of results of the acceptance testing shall be maintained on file with the specific device.

e. The Secretary of State shall be required to inspect the counties' maintenance records on a randomly selected one percent (1%) of all voting devices in possession of the counties throughout the state in even-numbered years, and to inspect the maintenance records on a randomly selected five percent (5%) of all voting devices in possession of the counties throughout the state in odd-numbered years.

43.8.7. Transportation of Equipment, Ballot Boxes, and Ballots

43.8.7.1 Counties are required to submit detailed plans to the Secretary of State prior to an election regarding the transportation of equipment and ballots both to remote voting sites and back to the central elections office or storage facility. While transportation of equipment may be handled in a multitude of methods, the following standards shall be followed when transporting voting equipment to the voting location:

a. Transportation by County Personnel. County personnel shall at all times display a badge or other identification provided by the County. Two (2) signatures and date of employees shall be required at the departure location verifying that the equipment, including memory card or cartridge, is sealed to prevent tampering. Upon delivery of equipment, at least two (2) employees or election judges shall verify that all seals are intact and that the serial numbers on the seals agree with those on the seal-tracking log, and sign and date the seal-tracking log. If there is any evidence of possible tampering with a seal, or if the serial numbers do not agree, they shall immediately notify the county clerk and recorder who shall follow the procedures specific to the incident as described in section 43.8.11 of this Rule.

b. Transportation by Election Judges. Election judges that are receiving equipment from county personnel shall inspect all components of voting devices and verify the specific numbers by signature and date on the seal-tracking log for the device. The election judge receiving the equipment shall request two (2) election judges at the voting location to inspect the devices and to sign and date the seal-tracking log indicating that all seals are intact and that the serial numbers on the seals agree with those on the seal-tracking log. If there is any evidence of possible tampering with a seal, or if the serial numbers do not agree, they shall immediately notify the county clerk and recorder who shall follow the procedures specific to the incident as described in section 43.8.11 of this Rule.

c. Transportation by Contract. Counties electing to contract the delivery of equipment to remote voting locations shall perform CBI background checks on the specific individuals who will be delivering the equipment. Two (2) employees or election judges shall verify, sign, and date the seal-tracking log upon release of the equipment to the individuals delivering the equipment.

Two (2) other employees or election judges shall verify, sign, and date the seal-tracking log after the equipment has been delivered, and prior to the opening of the polls. If there is any evidence of possible tampering with a seal, or if the serial numbers do not agree, they shall immediately notify the county clerk and recorder who shall follow the procedures specific to the incident as described in section 43.8.11 of this Rule.

43.8.7.2 The following standards shall be followed when transporting voting equipment from the voting location:

a. If memory cards or cartridges are to be removed from voting devices at remote voting locations, the following procedures are to be followed:

i. Before removing a memory card or cartridge, two (2) election judges shall inspect and verify that all seals on the device are intact and that the serial numbers on the seals agree with those listed on the seal-tracking log. Both election judges shall sign and date the seal-tracking log prior to breaking the seal. If there is any evidence of possible tampering with a seal, or if the serial numbers do not agree, they shall immediately notify the county clerk and recorder who shall follow the procedures specific to the incident as described in section 43.8.11 of this Rule.

ii. Election judges shall place the memory cards or cartridges in a sealable transfer case that shall be sealed with at least one (1) seal. Additional seal logs shall be maintained for the transfer case of the memory cards or cartridges.

iii. Election judges shall place new seals over the empty memory card/cartridge slot and/or door and document the seal numbers used.

iv. At least two (2) county personnel or election judges shall accompany the transfer case containing the memory card/cartridge to the drop off location. Seal integrity and serial numbers will be verified, and logs will be signed and dated by election judges receiving the equipment. If there is any evidence of possible tampering with a seal, or if the serial numbers do not agree, the county personnel or election judges shall immediately notify the county clerk and recorder who shall follow the procedures specific to the incident as described in section 43.8.11 of this rule.

v. County personnel or election judges transporting secured voting equipment must maintain chain of custody logs and seal-tracking logs. If there is any evidence of possible tampering with a seal, or if the serial numbers do not agree, they shall immediately notify the county clerk and recorder who shall follow the procedures specific to the incident as described in section 43.8.11 of this rule.

b. If devices are to be delivered with memory cards/cartridges intact, the following procedures shall be followed:

i. Two (2) county personnel or election judges shall verify that all seals are intact at the close of polls. Election judges shall sign the seal-tracking log with such indication. If there is any evidence of possible tampering with a seal, or if the serial numbers do not agree, they shall immediately notify the county clerk and recorder who shall follow the procedures specific to the incident as described in section 43.8.11 of this Rule.

ii. At least two (2) county personnel or election judges shall accompany the secured equipment to the drop-off location. Seals will be verified, and logs will be signed and dated by the county election official receiving the equipment. If there is any evidence of possible tampering with a seal, or if the serial numbers do not agree, they shall immediately notify the county clerk and recorder who shall follow the procedures specific to the incident as described in section 43.8.11 of this Rule.

iii. Upon confirmation that the seals are intact and bear the correct numbers, the memory card or cartridge shall be removed and uploaded into the central count system.

iv. Election judges shall secure the equipment by placing a tamper-evident seal over the memory card slot and by updating the documentation to reflect the new seal numbers.

43.8.8. Emergency Contingency Plans for Voting Equipment and Voting Locations

43.8.8.1 All remote devices used in an election shall have sufficient battery backup for at least two (2) hours of use. If this requirement is met by reliance on the internal battery of the voting device, then the county clerk and recorder shall verify that all batteries are fully charged and in working order prior to the opening of polls at the voting location. This requirement also can be met with the purchase of third-party battery backup systems.

43.8.8.2 In the event of a serious or catastrophic equipment failure or equipment being removed from service at one or more polling locations, or there is not adequate backup equipment to meet the requirements of Section 1-5-501, C.R.S., the county clerk and recorder shall contact the Secretary of State for authorization to use provisional ballots or mail-in ballots as an emergency voting method.

43.8.9. Internal Controls for the Voting System

43.8.9.1 In addition to the access controls discussed in section 43.8.3 of this Rule, counties are required to change all passwords and limit access to the following areas:

a. Software. All software passwords shall be changed once per calendar year prior to the first election. This includes any boot or startup passwords in use, as well as any administrator and user passwords and remote device passwords.

b. Hardware. All hardware passwords shall be changed once per calendar year prior to the first election. This includes any encryption keys, key card tools, supervisor codes, poll worker passwords on smart cards, USB keys, tokens,

and voting devices themselves as it applies to the specific system.

c. Password Management. Access to the administrative passwords to the election management software shall be limited to two (2) employees. Access to passwords for all components of the election software and hardware shall be limited to two (2) employees. An additional ten (10) employees may have access to the administrative passwords for the software components and an additional ten (10) employees may have access to the administrative passwords for the hardware components of the voting system.

d. Internet Access. At no time shall any component of the voting system be connected, directly or indirectly, to the Internet.

e. Modem Transmission. At no time shall any component of the voting system be connected to another device except for the vote tally software, directly or indirectly, by modem as allowable by the certification of the specific device.

f. Remote sites may use modem functions of optical scanners and DREs only for the purpose of transmitting unofficial results, as permitted by the Secretary of State's certification documents for the specific systems. Counties using modem devices to transmit results shall meet the following requirements:

   i. Transmissions may be used only for sending test data or unofficial results; after all other steps have been taken to close the polls. All summary tapes shall be printed before connecting any of the machines to a modem or telephone line.

   ii. Modems shall not be used for any programming, setup, or individual ballot-casting transmissions.

   iii. The receiving telephone number for the modem transmission shall be changed at least once per calendar year prior to the first election.

   iv. A maximum of six (6) employees shall have access to the telephone number receiving the transmission. Counties shall not publish or print the receiving telephone number for any election judge. To the extent possible, the telephone number shall be programmed into the device and used by the device in a way that is hidden from election judges and voters from seeing the display of the number at any time.

g. Authorized Employees. Counties shall include in their security plans the positions and dates of CBI background checks for employees with access to any of the areas or equipment set forth in this Rule. Each county shall maintain a storage-facility access log that details employee name, date, and time of access to the storage facility in which the software, hardware, or components of any voting system are maintained. If access to the storage facility is controlled by use of key card or similar door access system that is capable of producing a printed paper log including the person's name and date and time of entry, such a log shall meet the requirements of this rule.

43.8.10. Security Training for Election Judges

43.8.10.1 Counties shall include in their security plan the details of their security training for their election judges, which shall include the anticipated time of training, location of training, and number of election judges receiving the security training, as it applies to the following requirements:

a. The county shall conduct a separate training module for field technicians and election judges who will be responsible for overseeing the transportation and use of the voting systems, picking up supplies, and troubleshooting device problems throughout the Election Day.

b. Security training shall include the following components:

i. Proper application and verification of seals and seal-tracking logs;

ii. How to detect tampering with voting equipment, memory cards/cartridges, or election data on the part of anyone coming in contact with voting equipment, including employees, other election judges, vendor personnel, or voters;

iii. Ensuring privacy in voting booths;

iv. The nature of and reasons for the steps taken to mitigate the security vulnerabilities of voting systems;

v. V-VPAT requirements;

vi. Chain-of-custody requirements for voting equipment, memory cards/cartridges, and other election materials;

vii. Ballot security;

viii. Voter anonymity.; and

ix. Recognition and reporting of security incidents.

43.8.11 Remedies

43.8.11.1 If it is detected that the seal has been broken or if there is a discrepancy between the log and the serial number of either a voting device, or a memory card or cartridge, the condition must be confirmed by one or more of the remaining election judges for the location. The election judges shall immediately notify the county clerk and recorder, who shall investigate, report the incident to the Secretary of State, and follow the appropriate remedy as indicated in this rule or as directed by the Secretary of State.

43.8.11.2 If a seal has been broken or removed under the following conditions:

a. During either the transportation, setup, opening polls, or closing polls for the device;

b. Two election judges can verify the breaking or removing of the seal; and

c. The chain of custody has not been broken, meaning the device has been within ownership of election judges or employees only during this time;

The county clerk and recorder shall instruct the election judges to complete a security incident report detailing the incident, replacing the seals, and updating the chain of custody log as appropriate.

The Security incident report shall be filed with the Secretary of State during the canvass period.

43.8.11.3 If a seal has been broken or removed outside of the situation in 43.8.11.2, Any unit involved must undergo the reinstatement or verification of the trusted build. county clerk and recorders will be required to complete a security incident report. The minimum Sspecific requirements on the remedy are as follows (additional requirements may be determined based on the details of the incident report):

a. If the evidence is prior to the start of voting:

i. The device shall be sealed and securely delivered to the county clerk and recorder.

ii. The county clerk and recorder or his or her designee shall remove and secure the memory card following the procedures in section 43.8.1(a). The county clerk and recorder or his or her designee shall follow the State instructions for installing/verifying the trusted build for the specific device. The county clerk and recorder or his or her designee shall install a new, secure memory card into the device, conduct a hardware diagnostics test as prescribed in Rule 11, and proceed to conduct a logic and accuracy test on the machine in full election mode, casting at least 25 ballots on the device. All documentation of testing and chain of custody shall be maintained on file for each specific device.

iii Complete the necessary seal process and documentation to re-establish the chain of custody for the device and new memory card.

iv. Set the machine to election mode ready for a zero report.

vi. Complete necessary reports for the Secretary of State regarding the incident as soon as practicable, but prior to the close of the canvass period for the election.

b. If the evidence is after votes have been cast on the device but before the close of polls:

i. The device shall be sealed and securely delivered to the county clerk and recorder.

ii. The county clerk and recorder or his or her designee shall close the election on that device, and perform a complete manual verification of the paper ballots (or V-VPAT Records) to the summary tape printed on the device that represents the record of votes on the memory card.

iii. If the totals do not match then only the paper record will be accepted as the official results for that device, and the device shall be re-sealed, secured and reported to the Secretary of State immediately. The device shall not be used for the remainder of the election unless the firmware and/or software have been reformatted with the trusted build.

iv. If the totals match, the memory card may be uploaded into the tally software at the close of polls.

v. After verifying the totals, the paper records and memory card shall be secured with seals and documented properly.

vi. A new secured memory card shall be placed in the device. The county clerk and recorder or his or her designee shall follow the State instructions for installing/verifying the trusted build for the specific device. The county clerk and recorder or his or her designee shall conduct a hardware diagnostics test as prescribed in Rule 11. All documentation of testing and chain of custody shall be maintained on file for each specific device.

vii. Complete the necessary seal process and documentation to establish the chain of custody for the device and memory card.

viii. Set the machine to election mode ready for a zero report.

ix. At the conclusion of the election a full (all races) post-election audit shall be conducted on the device and results reported to the Secretary of State as required by Rule 11. This requirement is in addition to the random selection conducted by the Secretary of State.

x. Complete necessary reports for the Secretary of State regarding the incident as soon as practicable, but prior to the close of the canvass period for the election.

c. If the evidence is after the close of polls:

i. The device shall be sealed and securely delivered to the county clerk and recorder.

ii. The county clerk and recorder or his or her designee shall perform a complete manual verification of the paper ballots (or V-VPAT Records) to the summary tape printed on the device that represents the record of votes on the memory card.

iii. If the totals do not match then only the paper record will be accepted as the official results for that device, and the device shall be re-sealed, secured and reported to the Secretary of State immediately. The device shall not be used for the remainder of the election unless the firmware and/or software have been reformatted with the trusted build.

iv. If the totals match, the memory card may be uploaded into the tally software at the close of polls.

v. After verifying the totals, the paper records and memory card shall be secured with seals and documented properly.

vi. The county clerk and recorder or his or he designee shall follow the State instructions for installing/verifying the trusted build for the specific device and complete the necessary seal process and documentation to establish the chain of custody for the device.

vii. During the canvass process, a full (all races) post-election audit shall be conducted on the device and results reported to the Secretary of State as required by Rule 11. This requirement is in addition to the random selection conducted by the Secretary of State.

viii. Complete necessary reports for the Secretary of State regarding the incident prior to the close of the canvass period for the election.

43.8.11.4 Prior to the submission of certified results from the county, the county clerk and recorder shall provide a written report to the Secretary of State addressing the existence or absence of any security issues related to the implementation and operation of the voting system. All county documentation related to the voting system shall be available for inspection by the Secretary of State for all devices used in the election.

43.8.12 Any additional physical security procedures not discussed in these mandatory procedures shall be submitted to the Secretary of State for approval prior to the election.

43.9 The designated election official shall submit with the security plan sample copies of all referenced forms, schedules, logs, and checklists.

43. 10 Included in the security procedures filed with the secretary of state shall be a section entitled "contingency plan." The contingency plan shall include:

(a) Evacuation procedures for emergency situations including fire, bomb threat, civil unrest, and any other emergency situations identified by the designated election official;

(b) Back up plans for emergency situations including fire, severe weather, bomb threat, civil unrest, electrical blackout, equipment failure, and any other emergency situations identified by the designated election official;

(c) An emergency checklist for election judges; and

(d) A list of emergency contact numbers provided to election judges.

Rule 44. Rules Regulating Voter Registration Drives

44.1 Statement of Intent

44.1.1 In accordance with section 1-2-701, C.R.S., *et seq.,* the organizer of a Voter Registration Drive ("VRD") shall file a Statement of Intent with the Secretary of State to conduct a voter registration drive on a form prescribed by the Secretary of State. The Statement of Intent shall include the following information:

(a) The name of the organization and the name of the parent organization, if applicable;

(b) The contact information for the organization

(c) The name of the agent (who is required to be a Colorado resident) and the contact information for that agent;

(d) A statement specifying the counties in which the VRD intends to operate;

(e) A notice that the voter registration drive number expires at the end of the calendar year; and

(f) A signature line requiring the organizer's signature.

44.1.2 Any amendments to the Statement of Intent shall be filed in writing with the Secretary of State. Amendments may be made by fax, email, mail or in person.

(a) Any amendments to the Statement of Intent concerning the county in which the VRD will conduct a drive shall be filed a minimum of three (3) business days prior to commencing voter registration activity in a given county.

44.1.3 The Secretary of State shall immediately attempt to verify the information provided in the Statement of Intent prior to issuing a number to the VRD organizer. The Secretary of State may deny a number to the voter registration drive organizer if the information provided on the Statement of Intent cannot be verified.

44.1.4 The last day for a VRD to file a Statement of Intent with the Secretary of State shall be thirty (30) days before the general election in a given calendar year.

44.2 Training

44.2.1 The organizer of the VRD shall, before commencing the distribution or circulation of voter registration applications, complete a training provided by the Secretary of State.

44.2.2 In addition to training for the organizer, the Secretary of State shall make available information for the organizer to train individual circulators. Organizers shall provide training to all circulators. Organizers shall obtain and maintain on file signed attestations from each circulator that he or she will adhere to all the requirements of the Secretary of State election rules and the Colorado Revised Statutes pertaining to elections, and that they are aware of the penalties associated with the mishandling of voter registration application forms. The organizers shall furnish the circulator attestations to the secretary of state upon request.

44.2.3 The mandatory training provided by the Secretary of State shall include but not be limited to:

(a) The use of the standard Colorado Voter Registration Application Form;

(b) Information on where to obtain the standard Voter Registration Application Form;

(c) Information on how to ensure that a Form is filled out completely; including which fields are optional and which are required, and how to fill out the receipt portion of the Form;

(d) Notice of statutory deadlines relating to Voter Registration Applications Forms and voter registration drives;

(e) The requirements for when and where the Voter Registration Applications Forms must be turned in;

(f) Penalties for violating statutory prohibitions including fraud, intimidation, mishandling forms, failing to turn in forms and other penalties relevant to voter registration drives;

(g) The handling and treatment of confidential information on the Voter Registration Application Forms; and

(h) Notice that circulators shall not be paid per voter registration application, but if compensated, shall be paid by the hour or day.

44.2.4 After completing the training, the organizer shall sign an Acknowledgement that the training has been completed and that he or she has been duly informed of rules, laws and penalties relating to voter registration drives.

44.3 Number Assigned. After the organizer completes the required training, the Secretary of State shall assign a unique number to the VRD that meets the requirements of section 1-2-701, C.R.S., and this Rule. After issuing a unique number to the voter registration drive, the Secretary of State shall:

(a) Advise the VRD organizer of the unique number;

(b) Notify the county clerks within 24 hours of each registered voter registration drive registered with the Secretary of State; and

(c) Post the organization's name and contact person on the SOS website.

44.4 Voter Registration Drive Voter Application Forms

44.4.1 The Secretary of State shall approve a standard Colorado Voter Registration Application Form to be used by the VRD that shall include a tear off receipt.

(a) The VRD may also use the National Mail Voter Registration Form. Because the National Mail Voter Registration Form does not include a tear off receipt, the applicant and VRD are afforded greater protection when the standard Colorado form is used.

44.4.2 The Secretary of State and county clerks shall make available the official, approved Colorado Voter Registration Drive Application Forms to the VRD organizer

44.4.3 The organizer shall be responsible for placing the VRD number on the application form and the receipt portion of the standard Colorado form.

44.4.4 The person circulating the Voter Registration Application Forms shall ensure that the tear-off receipt on the standard Colorado Application is completed and given to the applicant. The person circulating the voter application forms shall advise the applicant that the receipt may be needed when he or she votes.

44.4.5 The VRD organizer is not eligible to receive the approved Colorado Voter Registration drive Application Forms until the organizer has completed training, signed the statement of intent, completed and signed the Acknowledgement, and been assigned a number.

44.4.6 Any voter registration drive that provides a voter registration application on its website or a link to such voter registration form must direct the applicant to return the completed form directly to the county clerk and recorder of the applicant's legal residence. No voter registration drive may provide a voter registration form on its website or a link to such voter registration form which instructs or directs, in any way, the applicant to return the completed form to anyone or any group other than directly to the county clerk and recorder of the applicant's legal residence or, in the case of overseas electors or UOCAVA electors, the county clerk and recorder or the Secretary of State.

44.5 Renewal Procedures

44.5.1 Prior to conducting a VRD in the next calendar year, a VRD organizer that completed training and was assigned a unique VRD number in the prior year must apply for renewal and receive a new VRD number.

44.5.2 To receive a VRD number for the next calendar year, the VRD organizer may complete an online renewal within sixty (60) days after expiration of the VRD number, or attend training offered by the Secretary of State in accordance with Rule 44.2.

44.5.3 For online renewal, the VRD organizer shall complete the renewal exercise provided on the Secretary of State website. The VRD organizer shall then submit to the Secretary of State a completed statement of intent in accordance with section 1-2-701, C.R.S., and Rule 44.1.

a. A VRD organizer who correctly answers one hundred percent (100%) of the renewal exercise questions shall be issued a VRD number for the next calendar year.

b. A VRD organizer who does not correctly answer one hundred percent (100%) of the renewal exercise questions shall not be issued a VRD number for the next calendar year until he or she attends a training offered by the Secretary of State.

44.5.4 A VRD organizer that attended training in person or via conference call in the previous year is eligible to complete the online renewal in the current year.

44.6 Voter Registration Drive Complaints and fines

44.6.1 Any person, including the Secretary of State, who believes a VRD organizer or circulator has not complied with the requirements of section 1-2-701 *et seq.*, C.R.S., or this Rule 44 may file a written complaint with the Secretary of State.

44.6.2 A written complaint filed with the Secretary of State shall contain the following information:

a. The complainant's name;

b. The complainant's full residence address and mailing address (if different from residence);

c. A description of the alleged violation, which may include a reference to the particular statute or rule;

d. The name and assigned number of the VRD, if known;

e. The date and location of the alleged violation, if known; and

f. Other applicable or relevant information

44.6.3 The Secretary of State shall review all complaints submitted in writing and conduct such investigations as may be necessary and appropriate. If the Secretary of State determines that a violation has occurred, the Secretary of State shall impose a fine in accordance with section 1-2-703, C.R.S.

44.6.4 The Secretary of State shall review all complaints submitted in writing and conduct such investigations as may be necessary and appropriate. If the Secretary of State determines that a violation has occurred, the Secretary of State shall impose a fine in accordance with section 1-2-703, C.R.S., and notify the VRD organizer of:

44.6.4.1 The date and factual basis of each act with which the VRD organizer is being charged;

44.6.4.2 The particular provision of the statute violated; and

44.6.4.3 The amount of the fine imposed.

44.6.5 Notification of violation shall be sent by certified or registered mail, return receipt requested, to the last known address of the VRD organizer.

44.6.6 The VRD organizer may appeal a fine and shall have thirty (30) days following receipt of notification to submit a written response setting forth the reason(s) that the VRD organizer is appealing the fine. The VRD organizer may request, within the thirty (30) days, a hearing with the secretary of state to dispute the fine.

44.6.7 Within thirty (30) days after receipt of the written response, or hearing procedures, the secretary of state shall issue an order affirming or dismissing the imposed fine.

Rule 45. Rules Concerning Voting System Standards for Certification

45.1 Definitions The following definitions apply to their use in this rule only, unless otherwise stated.

45.1.1 “Audio ballot” means a voter interface containing the list of all candidates, ballot issues, and ballot questions upon which an eligible elector is entitled to vote at an election and that provides the voter with audio stimuli and allows the voter to communicate voting intent to the voting system through vocalization or physical actions.

45.1.2 “Audit log” means a system-generated record, in printed and/or electronic format, providing a record of activities and events relevant to initialization of election software and hardware, identification of files containing election parameters, initialization of the tabulation process, processing of voted ballots, and termination of the tabulation process.

45.1.3 “Ballot image” or “Ballot image log” means a corresponding representation in electronic form of the marks or vote positions of a cast ballot that are captured by a direct recording electronic voting device.

45.1.4 “Ballot style assignment” means the creation of unique, specific ballots for an election by

the election management system based on criteria keyed into the system for districts, precincts, and races to create combinations of possibilities of races for individual voters based on their individual precincts.

45.1.5 “Closed network” means a network structure where devices are not connected to the internet or other office automation networks, except as allowable under section 45.5.2.7.

45.1.6 “Communications devices” means devices that may be incorporated in or attached to components of the voting system for the purpose of transmitting tabulation data to another data processing system, printing system, or display device.

45.1.7 “DRE” means a direct recording electronic voting device. A DRE is a voting device that records votes by means of a ballot display provided with mechanical or electro-optical components or an audio ballot that can be activated by the voter; that processes data by means of a computer program; and that records voting data and ballot images in memory components or other media. The device may produce a tabulation of the voting data stored in a removable memory component and as printed copy. The device may also provide a means for transmitting individual ballots or vote totals to a central location for consolidating and reporting results from remote sites to the central location.

45.1.8 “EAC” means the United States Election Assistance Commission.

45.1.9 “Election media” means any device including a cartridge, card, memory device, or hard drive used in a voting system for the purposes of programming ballot image data (ballot or card styles), recording voting results from electronic vote tabulating equipment, or any other data storage needs required by the voting system for a particular election function. The election management system typically delivers (downloads) ballot style information to the election media and receives (uploads) cast ballot information in the form of a summary of results and ballot images.

45.1.10 “Equipment” or “device” means a complete, inclusive term to represent all items submitted for certification by the voting system provider. This can include, but is not limited to any voting device, accessory to voting device, DRE, touch screen voting device, card programming device software, and hardware, as well as a complete end to end voting system solution.

45.1.11 “FEC” means the Federal Election Commission.

45.1.12 “Remote site” means any physical location identified by a Designated Election Official as a location where the jurisdiction shall be conducting the casting of ballots for a given election. A remote site includes locations such as precinct polling places, vote centers, early voting, mail-in ballot counting, etc.

45.1.13 “Removable Storage Media” means any device that is intended to be removed that has the ability of storing or processing data for a voting system.

45.1.14 “Security” means the ability of a voting system to protect election information and election system resources with respect to confidentiality, integrity, and availability.

45.1.15 “Split Precinct” means a precinct that has a geographical divide between one or more political jurisdictions which may cause a unique ballot style to be created for a specific election.

45.1.16 “Test Log” means documentation of certification testing and processes which is independently reproducible to recreate all test scenarios conducted by the testing board.

The log may include documentation such as: photographs, written notes, video and/or audio recorded notes.

45.1.17 "Trusted Build" means the write-once installation disk or disks for software and firmware for which the Secretary of State or his/her agent has established the chain of evidence to the building of a disk, which is then used to establish and/or re-establish the chain of custody of any component of the voting system which contains firmware or software. The trusted build is the origin of the chain of evidence for any software and firmware component of the voting system.

45.1.18 "VSTL" means a voting system testing laboratory that provides engineering, testing, or evaluation services for voting systems, and is qualified by the EAC to conduct qualification testing on a voting system.

45.2 Introduction

45.2.1 Definition of voting system for certification purposes

45.2.1.1 The definition of a voting system for the purposes of this rule shall be as the term is defined in HAVA section 301(b). For Colorado purposes, no single component of a voting system, such as a precinct tabulation device, meets the definition of a voting system.

45.2.1.2 Sufficient components shall be assembled to create a configuration that shall allow the system as a whole to meet the requirements as described for a voting system in this rule.

45.2.2 Authority

45.2.2.1 Pursuant to Articles 5 and 7 of Title 1, C.R.S., the Secretary of State is expressly authorized to adopt this rule.

45.2.3 Documents Incorporated by Reference

45.2.3.1 All documents incorporated by reference in this Rule 45 do not include any later amendments or editions of the document.

45.2.3.2 All documents incorporated by reference in this Rule 45 may be viewed on the "Voting Systems" page of the "Elections Center" on the Secretary of State website at www.sos.state.co.us, or by contacting the Secretary of State Voting Systems Specialist /1700 Broadway – Suite 270/Denver, CO 80290.

45.3 Certification Process Overview and Timeline

45.3.1 The voting system shall be considered as a unit, and all components of such system shall be tested at once, unless the circumstances necessitate otherwise (e.g. retrofitted V-VPATs, etc.). Any change made to individual components of a voting system shall require re-certification of the entire voting system in accordance with this rule.

45.3.2 For a voting system to pass certification the voting system provider shall successfully complete all phases of the certification process which shall include: submitting a complete application; review of the documentation to evaluate if the system meets the requirements of this rule; demonstration of the system; and functional testing of the voting system which shall demonstrate substantial compliance with the requirements of this rule, Colorado Election Code, and any additional testing that is deemed necessary by the

Secretary of State.

45.3.3 The following milestones indicate the flow of the certification process – see timeline below:

(a) Phase I – 6 days maximum. Voting system provider submits application and Secretary of State reviews for completeness. Voting system provider shall have 30 days to remedy and make application complete.

(b) Phase II – 16 Days maximum. Secretary of State reviews the documentation submitted and upon successful completion makes arrangements with voting system provider for demonstration.

(c) Phase III – 36 days maximum. When demonstration is complete, Secretary of State performs the functional testing.

(d) Phase IV – 2 days maximum. Upon completion of functional testing, Secretary of State makes a decision to cerfity a voting system and produces applicable certification document.

(e) Phase V – 30 days maximum. Upon decision to certify a voting system, Secretary of State shall produce a qualification report for the voting system and components certified, which shall be posted on the Secretary of State website.

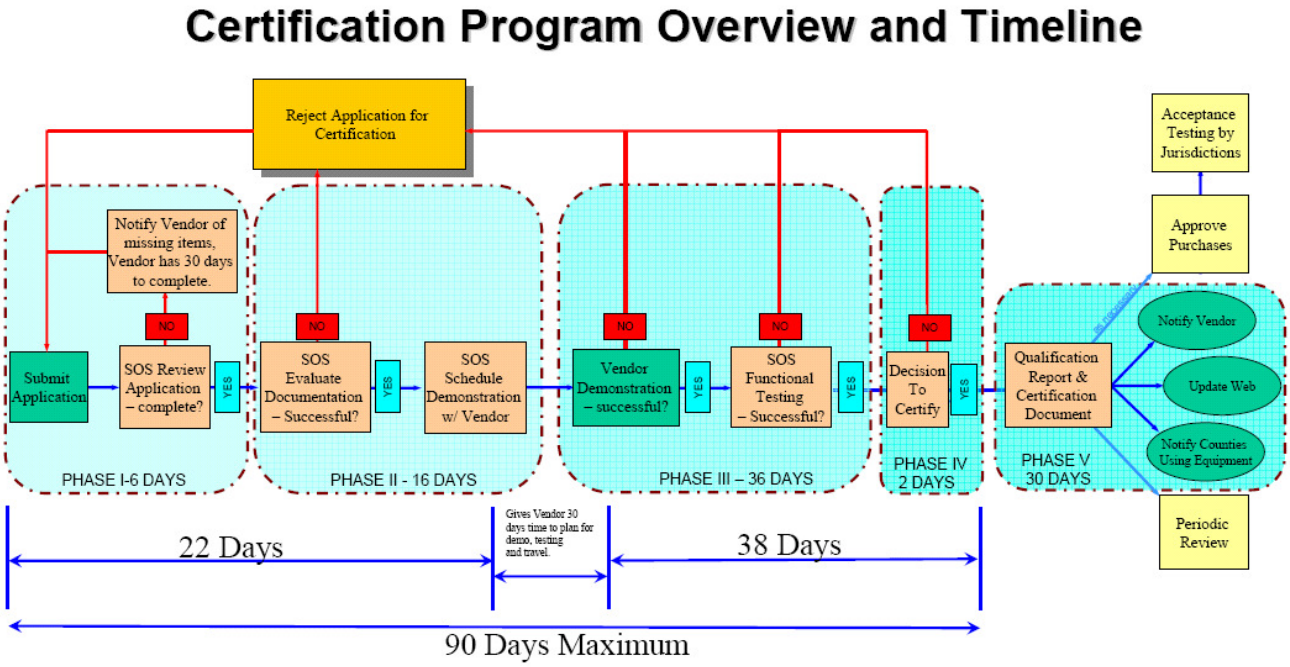

45.4 Application Procedure

45.4.1 Any voting system provider may apply to the Secretary of State for certification at any

time.

45.4.2 A voting system provider that submits a voting system for certification shall complete the Secretary of State's "Application for Certification of Voting System".

45.4.3 The voting system provider shall establish an escrow account pursuant to State procurement processes to compensate the Secretary of State for necessary outside costs associated with the testing of the system. The Secretary of State shall provide an estimate of costs for certification testing at the conclusion of Phase II evaluation.

45.4.4 Along with the application, the voting system provider shall submit all the documentation necessary for the identification of the full system configuration submitted for certification. This documentation shall include information that defines the voting system design, method of operation, and related resources. It shall also include a system overview and documentation of the voting system's functionality, accessibility, hardware, software, security, test and verification specifications, operations procedures, maintenance procedures, and personnel deployment and training requirements. In addition, the documentation submitted shall include the voting system provider's configuration management plan and quality assurance program.

45.4.5 Electronic copies of documentation are preferred and shall be submitted in lieu of a hard copy when possible.

45.4.6 If the EAC has established a trusted build for the system submitted for certification, the trusted build shall be provided by the EAC. The voting system provider shall execute and submit to the EAC any necessary releases for the EAC to provide the same, and shall provide the Secretary of State's office with a copy of such executed releases. The voting system provider shall pay directly to the EAC any cost associated with same. In addition, the voting system provider shall submit all documentation and instructions necessary for the creation of and guided installation of files contained in the trusted build which will be created at the start of functional testing and will be the model tested against. The Secretary of State reserves the right to add additional instructions or guidance for the use of the trusted build when initiating the chain of custody process for a jurisdiction using the specified equipment.

45.4.7 If the EAC does not have a trusted build for the voting system submitted for certification, the voting system provider shall coordinate with the Secretary of State for the establishment of the trusted build. At a minimum this shall include a compilation of files placed on write-once media for which the Secretary of State has observed the chain of evidence from time of source code compliation through delivery, and an established hash file distributed from a VSTL or the National Software Reference Library to compare federally certified versions against. All or any part of the Trusted Build disks may be encrypted. They should all be labeled as Proprietary Information if applicable and with identification of the voting system provider's name and release version based on the voting system provider's release instructions.

45.4.8 All materials submitted to the Secretary of State shall remain in the custody of the Secretary of State during the life of the certification and for twenty-five (25) months after the last election in which the system is used with the exception of any equipment provided by the voting system provider to purposes of testing.

45.4.9 In addition to the application and the documentation specified above, the Secretary of State may request additional information from the applicant, as deemed necessary by the Secretary of State.

45.5 Voting System Standards

45.5.1 Federal Standards

45.5.1.1 All voting systems shall meet the voting systems standards pursuant to section 1-5-601.5, C.R.S., and Secretary of State Rule 37.3.

45.5.1.2 All voting system software, hardware, and firmware shall meet all requirements of federal law that address accessibility for the voter interface of the voting system. These laws include, but are not necessarily limited to, (a) the Help America Vote Act, (b) the Americans with Disabilities Act, and (c) the Federal Rehabilitation Act. The voting system provider shall acknowledge explicitly that their proposed software, hardware, and firmware are all in compliance with the relevant accessibility portions of these laws.

45.5.1.3 The Secretary of State or his/her designee shall review all of the documentation submitted from federal testing for compliance with applicable laws and regulations. Documentation of tests completed at the federal level may be used for compliance of duplicate State level requirements; however compliance with federal standards does not necessarily establish compliance with Colorado standards.

45.5.2 State Standards

45.5.2.1 Functional requirements

45.5.2.1.1 Functional requirements shall address any and all detailed operations of the voting system related to the management and controls required to successfully conduct an election on the voting system.

45.5.2.1.2 The voting system shall provide for appropriately authorized users to:

(a) Prepare the system for an election;

(b) Setup and prepare ballots for an election;

(c) Lock and unlock system to prevent or allow changes to ballot design;

(d) Conduct hardware and diagnostics testing as required herein;

(e) Conduct logic and accuracy testing as required herein;

(f) Conduct an election and meet additional requirements as identified in this section for procedures for voting, auditing information, inventory control, counting ballots, opening and closing polls, recounts, reporting, and accumulating results as required herein;

(g) Conduct the post election audit as required herein; and

(h) Preserve the system for future election use.

45.5.2.1.3 The voting system shall accurately integrate election day voting results with mail-in, early voting and provisional ballot results.

45.5.2.1.4 The voting system shall be able to count all of an elector's votes on a provisional ballot or only federal and statewide offices and statewide ballot issues and questions, as provided under section 1-8.5-108(2), C.R.S.

45.5.2.1.5 The voting system shall provide for the tabulation of votes cast in split precincts where all voters residing in one precinct are not voting the same ballot style.

45.5.2.1.6 The voting system shall provide for the tabulation of votes cast in combined precincts at remote sites, where more than one precinct is voting at the same location, on either the same ballot style or a different ballot style.

45.5.2.1.7 The voting system application shall provide authorized users with the capability to produce electronic files including election results in either ASCII (both comma-delimited and fixed-width) or web-based format that shall contain (a) all data or (b) any user selected data elements from the database. The software shall provide authorized users with the ability to generate these files on an "on-demand" basis. After creating such files, the authorized users shall, at their discretion, have the capability to copy the files to diskette, tape, or CD-ROM or to transmit the files to another information system.

(a) Exports necessary for the Secretary of State shall conform to an agreed upon format.

(b) Export files shall be generated so that election results can be communicated to the Secretary of State on election night both during the accumulation of results and after all results have been accumulated.

45.5.2.1.8 The voting system shall include hardware and software to enable the closing of the remote voting location and disabling acceptance of ballots on all vote tabulation devices to allow for the following:

(a) Machine-generated paper record of the time the voting system was closed.

(b) Readings of the public counter and protective counter shall become a part of the paper audit record upon disabling the voting system to prevent further voting.

(c) Ability to print an abstract of the count of votes which shall contain:

(i) Names of the offices;

(ii) Names of the candidates and party when applicable;

(iii) A tabulation of votes from ballots of different political parties at the same voting location in a primary election;

(iv) Ballot titles;

(v) Submission clauses of all initiated, referred or other ballot issues or questions; and

(vi) The number of votes counted for or against each candidate or ballot issue.

(d) Abstract shall include an election judge's certificate and statement that contains:

(i) Date of election (day, month and year);

(ii) Precinct Number (ten digit format);

(iii) County or Jurisdiction Name;

(iv) State of Colorado;

(v) Count of votes as indicated in this section; and

(vi) Area for judge's signature with the words similar to: "Certified by us", and "Election Judges". Space should allow for a minimum of two signatures.

(e) Votes counted by a summary of the voting location, and by individual precincts.

(f) Ability to produce multiple copies of the unofficial results at the close of the election.

(g) Ability to accommodate a two page ballot (races on four faces) is required.

45.5.2.1.9 Voters voting on DRE devices shall be able to navigate through the screens without the use of page scrolling. Features such as next or previous page options shall be used.

45.5.2.1.10 The voting system application shall ensure that an election setup may not be changed once ballots are printed and/or election media devices are downloaded for votes to be conducted without proper authorization and acknowledgement by the application administrative account. The application and database audit transaction logs shall accurately reflect the name of the system operator making the change(s), the date and time of the change(s), and the "old" and "new" values of the change(s).

45.5.2.2 Performance Level

45.5.2.2.1 Performance Level shall refer to any operation related to the speed and efficiency required from the voting system to

accomplish the successful conduct of an election on the voting system.

45.5.2.2.2 The voting system shall meet the following minimum requirements for casting ballots during functional testing for certification. Speed requirements are based on a printed double sided complete 18" ballot with a minimum of 20 contests:

(a) Optical Scan Ballots at voting location(s) = 100 ballots per hour;

(b) DRE / Touch Screen = 20 ballots per hour; and

(c) Central Count Optical Scan Ballots = 100 ballots per hour.

45.5.2.2.3 The voting system provider shall publish and specify processing standards for each component of the voting system as part of the documentation required for certification.

45.5.2.2.4 For the purposes of evaluating software, the voting system provider shall be required to provide detailed information as to the type of hardware required to execute the software. The performance level shall be such that an evaluator of the software would have pauses equal to less than five (5) seconds in the system during the ballot design and creation, along with the downloading and uploading of election media devices. Specifically, the following minimum standards are required:

(a) Ballot style initial layout is less than 10 seconds per ballot style;

(b) Election Media Download for vote storage media without audio files is less than 35 seconds per media;

(c) Election Media Upload is less than 20 seconds per media; and

(d) The application software upon creation of the layout of the races on ballot shall produce the ballot image (on screen) for the evaluator in less than thirty (30) seconds per ballot image.

45.5.2.2.5 At no time shall third party hardware or software negatively impact performance levels of voting system application, unless a voting system provider specifically details through documentation the specific hardware or software, the performance impact, and a workaround for the end user to overcome the issue.

45.5.2.3 Physical and Design Characteristics

45.5.2.3.1 Physical and design characteristics shall address any and all external or internal construction of the physical environment of the voting system, or the internal workings of the software necessary for the functioning of the voting system. The voting system shall substantially comply with these requirements to be

considered successful in the conduct of an election on the voting system.

45.5.2.3.2 The voting system shall meet the following environmental controls allowing for storage and operation in the following physical ranges:

(a) Operating – Max. 95 Degrees Fahrenheit; Min 50 Degrees Fahrenheit, with max. humidity of 90%, normal or minimum operating humidity of 15%.

(b) Non-Operating – Max. 140 Degrees Fahrenheit; Min. 4 Degrees Fahrenheit. Non-operating humidity ranges from 5% to 90% for various intervals throughout the day.

The material supplied by the voting system provider shall include a statement of all requirements and restrictions regarding environmental protection, electrical service, telecommunications service, and any other facility or resource required for the installation, operation, and storage of the voting system.

45.5.2.3.3 The ballot definition subsystem of the voting system application consists of hardware and software required to accomplish the functions outlined in this section 45.5.2.3. System databases contained in the Ballot Definition Subsystem may be constructed individually or they may be integrated into one database. These databases are treated as separate databases to identify the necessary types of data that shall be handled and to specify, where appropriate, those attributes that can be measured or assessed for determining compliance with the requirements of this standard.

45.5.2.3.4 The Ballot Definition Subsystem shall be capable of formatting ballot styles in English and any alternate languages as are necessary to comply with The "Voting Rights Act of 1965" 42 U.S.C. § 1973c et seq. (1965).

45.5.2.3.5 The voting system application shall allow the operator to generate and maintain an administrative database containing the definitions and descriptions of political subdivisions and offices within the jurisdiction.

45.5.2.3.6 The ballot definition subsystem shall provide for the definition of political and administrative subdivisions where the list of candidates or contests may vary within the remote site and for the activation or exclusion of any portion of the ballot upon which the entitlement of a voter to vote may vary by reason of place of residence or other such administrative or geographical criteria. This database shall be used by the system with the administrative database to format ballots or edit formatted ballots within the jurisdiction.

45.5.2.3.7 For each election, the subsystem shall allow the user to generate and maintain a candidate and contest database and provide for

the production and/or definition of properly formatted ballots and software.

45.5.2.3.8 The ballot definition subsystem shall be capable of handling at least 500 potentially active voting positions, arranged to identify party affiliations in a primary election, offices and their associated labels and instructions, candidate names and their associated labels and instructions, and ballot issues or questions and their associated text and instructions.

45.5.2.3.9 The ballot display may consist of a matrix of rows or columns assigned to political parties or non-partisan candidates and columns or rows assigned to offices and contests. The display may consist of a contiguous matrix of the entire ballot or it may be segmented to present portions of the ballot in succession.

45.5.2.3.10 The voting system application shall provide a facility for the definition of the ballot, including the definition of the number of allowable choices for each office and contest, and for special voting options such as write-in candidates. It shall provide for all voting options and specifications as provided for in Articles 5 and 7, Title 1, C.R.S. The system shall generate all required masters and distributed copies of the voting program in conformance with the definition of the ballot for each voting device and remote site. The distributed copies, resident or installed in each voting device, shall include all software modules required to: monitor system status and generate machine-level audit reports, accommodate device control functions performed by remote location officials and maintenance personnel, and register and accumulate votes.

45.5.2.3.11 The trusted build of the voting system software, installation programs, and third party software (such as operating systems, drivers, etc.) used to install or to be installed on voting system devices shall be distributed on a write-once media.

45.5.2.3.12 The voting system shall allow the system administrative account to verify that the software installed is the certified software by comparing it to the trusted build or other reference information.

45.5.2.3.13 All DRE voting devices shall use touch screen technology or other technology providing visual ballot display and selection. The voting system provider shall provide documentation concerning the use of touch screen or other display and selection technology, including but not limited to:

(a) Technical documentation describing the nature and sensitivity of the tactile device (if the system uses touch screen technology);

(b) Technical documentation describing the nature and sensitivity of any other technology used to display and select offices, candidates, or issues;

(c) Any mean time between failure (MTBF) data collected on the vote recording devices; and

(d) Any available data on problems caused for persons who experience epileptic seizures due to the DRE voting devices' screen refresh rate.

45.5.2.3.14 The voting system shall contain a control subsystem that consists of the physical devices and software that accomplish and validate the following operations:

(a) Voting System Preparation - The control subsystem shall encompass the hardware and software required to prepare remote location voting devices and memory devices for election use. Remote site preparation includes all operations necessary to install ballot displays, software, and memory devices in each voting device. The control subsystem shall be designed in such a manner as to facilitate the automated validation of ballot and software installation and to detect errors arising from their incorrect selection or improper installation.

(b) Error Detection – the voting system shall contain a detailed list and description of the error messages that will appear on the voting devices, the controller (if any), the paper ballot printer, programmer, or any other device used in the voting process to indicate that a component has failed or is malfunctioning.

45.5.2.3.15 The voting system shall have a high level of integration between the ballot layout subsystem and the vote tabulation subsystem. This integration shall permit and facilitate the automatic transfer of all ballot setup information from the automated ballot layout module to the single ballot tabulation system that will be used in a fully integrated manner for DRE, optical scan, and any other voting devices included in the voting system.

45.5.2.3.16 The processing subsystem contains all mechanical, electromechanical, and electronic devices required to perform the logical and numerical functions of interpreting the electronic image of the voted ballot and assigning votes to the proper memory registers. Attributes of the processing subsystem that affect its suitability for use in a voting system, are accuracy, speed, reliability, and maintainability.

(a) Processing accuracy refers to the ability of the subsystem to receive electronic signals produced by vote marks and timing information, to perform logical and numerical operations upon these data, and to reproduce the contents of memory when required without error. Processing subsystem accuracy shall be measured as bit error rate, which is the ratio of uncorrected data bit errors to the number of total data bits processed when the system is operated at its nominal or design rate of processing in a time interval of four (4) hours. The bit error rate shall include all errors from any source in the processing

subsystem. For all types of systems, the Maximum Acceptable Value (MAV) for this error rate shall be one (1) part in five hundred thousand (500,000) ballot positions, and the Nominal Specification Value (NSV) shall be one (1) part in ten million (10,000,000) ballot positions.

(b) Memory devices that are used to retain control programs and data shall have demonstrated at least a ninety-nine and a half (99.5) percent probability of error-free data retention for a period of six months for operation and non-operation.

45.5.2.3.17 The reporting subsystem contains all mechanical, electromechanical, and electronic devices required to print reports of the tabulation. The subsystem also may include data storage media and communications devices for transportation or transmission of data to other sites. Telecommunications Devices shall not be used for the preparation or printing of an official canvass of the vote unless they conform to a data interchange and interface structure and protocol that incorporates auditing and error check as required by 45.5.2.7.

45.5.2.3.18 The approach to design shall be unrestricted, and it may incorporate any form or variant of technology that is capable of meeting the requirements of this rule, and other attributes specified herein. The frequency of voting system malfunctions and maintenance requirements shall be reduced to the lowest level consistent with cost constraints. Applicants are required to meet or exceed MIL-HDBK-454; "Standard General Requirements for Electronic Equipment" that is hereby adopted and incorporated by reference, as a guide in the selection and application of materials and parts only as is relevant to this section.

45.5.2.3.19 All electronic voting devices provided by the voting system provider shall have the capability to continue operations and provide continuous device availability during a period of electrical outage without any loss of election data.

(a) For optical scan devices, this capability shall include at a minimum for a period of not less than three (3) hours the ability to:

(i) Continue to scan or image voters' ballots;

(ii) Tabulate accurately voters' choices from the ballots;

(iii) Store accurately voters' ballot choices during a period of electrical outage; and

(iv) Transmit required results files accurately if power failure experienced during transmittal of results.

(b) For DRE devices, this capability shall include at a minimum for a period of not less than three (3) hours the ability to:

(i) Continue to present ballots accurately to voters;

(ii) Accept voters' choices accurately on the devices;

(iii) Tabulate voters' choices accurately;

(iv) Store voters' choices accurately in all storage locations on the device; and

(v) Transmit required results files accurately if power failure is experienced during transmittal of results.

(c) For V-VPAT devices connected to DREs, this capability shall include at a minimum for a period of not less than three (3) hours the ability to:

(i) Continue to print voters' choices on the DRE accurately and in a manner that is identical to the manner of the printers' operations during a period of normal electrical operations; and

(ii) Continue to store the printed ballots in a secure manner that is identical to the manner of the printers' operations during a period of normal electrical operations.

(d) The voting system provider shall deliver to the Secretary of State documentation detailing estimated time of operation on battery for each type of optical scanner, ballot imager, DRE, and V-VPAT they provide, assuming continuous use of the devices by voters during an interruption of normal electrical power.

(e) The voting system provider shall deliver to the Secretary of State documentation specifying the steps and times required for charging batteries for each type of optical scanner, ballot imager, DRE and V-VPAT they provide.

45.5.2.3.20 The voting system provider's software application shall be able to recover operations after a power outage or other abnormal shutdown of the system on which that application and database are operating without loss of more than the current transaction data record on which the administrative account or authorized operator account is currently working.

45.5.2.3.21 The voting system shall provide capabilities to enforce confidentiality of voters' ballot choices.

(a) All optical scan devices, associated ballot boxes and V-VPAT storage devices shall provide physical locks and

procedures to prevent disclosure of voters' confidential ballot choices during and after the vote casting operation.

(b) All DRE devices shall provide randomization of all voter choices and stored, electronic ballot information, regardless of format, to prevent disclosure of voters' confidential ballot choices during and after storage of the voters' ballot selections.

45.5.2.3.22 The voting system and all associated components shall have an estimated useful life of at least eight (8) years. Voting system provider shall provide documentation of the basis for the estimate.

45.5.2.3.23 The voting system provider shall submit drawings, photographs, and any related brochure documents to assist with the evaluation of the physical design of the use of the voting system.

45.5.2.4 Documentation Requirements

45.5.2.4.1 In addition to other documentation requirements in this rule, the voting system provider shall provide the following documents:

(a) Standard Issue Users/Operator Manual;

(b) System Administrator's / Application Administration Manual;

(c) Training Manual (and materials);

(d) Systems Programming and Diagnostics Manuals; and

(e) A list of minimum services needed for successful, secure and hardened operation of all components of voting system.

45.5.2.4.2 All VSTL qualification reports, test logs, and technical data packages shall be evaluated to determine if the voting system meets the requirements of this rule and have completed the applicable federal certification requirements at the time of State testing. Failure to provide such documentation of independent testing will result in the voting system application being rejected.

(a) The voting system provider shall execute and submit any necessary releases for the applicable VSTL and/or EAC to discuss any and all procedures and findings relevant to the voting system submitted for certification with the Secretary of State's office. The voting system provider shall provide a copy of the same to the Secretary of State's office.

45.5.2.4.3 All voting system providers submitting a voting system for certification after March 31, 2008, shall, prior to applying for certification, have completed and provided documentation of an independent analysis of the system coordinated through the

Secretary of State's office. The independent analysis shall include:

(a) Application penetration test conducted to OSSTMM 2.2 standards for White or Double Gray box testing;

(b) Source code evaluated to the requirements identified in 45.5.2.6.1(f);

(c) A complete review of the source code for these two tests shall be provided as part of the certification process;

(d) A complete report of acceptable compensating controls shall be provided with the tests conducted for items (a) and (b) of this section.

(i) Inability for the voting system provider to provide acceptable compensating controls will require a retest of the system under this section until all compensating controls have a valid procedural mitigation strategy.

(e) The vendor shall use an EAC approved VSTL to perform the independent analysis;

(f) The Secretary of State or the designated agent shall review all work performed by contractor for quality of work product under this section. The review may include any or all of the following requirements:

(i) Review of records at contractors' site;

(ii) Interviews of employees who performed the work; and

(iii) Interviews of any subcontractors used.

(g) The Secretary of State has the right to reject evaluations performed if not satisfied with the work product and may request additional reviews of the voting system provider.

45.5.2.4.4 Documentation submitted to the Secretary of State shall be reviewed to ensure the voting system has been tested to federal standards.

(a) Voting System providers shall provide the Secretary of State with their documented project plans for modifying their voting systems to comply with and achieve certification under the EAC's adopted 2005 Voluntary Voting System Guidelines by January 1, 2008 if not currently tested and certified to that standard at time of applying for certification.

45.5.2.4.5 Failure by the voting system provider to provide any documentation within the timelines established in this rule shall delay the certification process for the specific application.

45.5.2.5 Audit capacity

45.5.2.5.1 The voting system shall be capable of producing electronic and printed audit logs of system operation and system operators actions which shall be substantially compliant to allow operations and input commands to be audited.

45.5.2.5.2 The voting systems shall include detailed documentation as to the level, location, and programming of audit trail information throughout the system. The audit information shall apply to:

(a) Operating Systems (workstation, server, and/or DRE);

(b) Election Programming Software;

(c) Election Tabulation devices – optical scan and DRE; and

(d) Election Result Consolidation and Reporting.

45.5.2.5.3 The voting system shall track and maintain audit information of the following voting system application events:

(a) Log on and log off activity;

(b) Application start and stop;

(c) Printing activity (where applicable);

(d) Election events – setup, set for election, unset for election, open polls, close polls, end election, upload devices, download devices, create ballots, create precincts, create districts, create poll places (or Vote Centers), initialize devices, backup devices, and voting activity; and

(e) Hardware events – add hardware, remove hardware, initialize hardware, and change hardware properties.

45.5.2.5.4 All tabulation devices shall display the unit serial number(s) both physically and within any applicable software, logs, or reports.

45.5.2.5.5 Vote tabulation devices shall allow for an alternate method of transfer of audit records if the device or a memory storage device is damaged or destroyed.

45.5.2.5.6 All transaction audit records of the voting system application database shall be maintained in a file outside or separate from the database, which is not accessible by user/operator accounts.

45.5.2.6 Security Requirements

45.5.2.6.1 All voting systems submitted for certification shall meet the following minimum system security requirements:

(a) The voting system shall accommodate a general system of access by least privilege and role based access control. The following requirements shall apply:

(i) The operating system Administrative Account shall not have access to read or write data to the database and shall not have the ability or knowledge of the database administrator password;

(ii) The operating system administrative account shall not be required to use any function of the voting system during normal operations;

(iii) A unique system user/operator account shall be created for operating system use that is restricted from the following aspects of the operating system:

a. No access to system root directory;

b. No access to operating system specific folders;

c. No access to install or remove programs; and

d. No access to modify other user accounts on the system.

(iv) A unique application administrative account shall be created which has full access and rights to the application and database;

(v) A unique application user/operator account shall be created with limited rights specifically designed to perform functional operation within the scope of the application. This user/operator shall be restricted in the creation or modification of any user/operator accounts; and

(vi) Voting system provider shall not have administrative account, or administrative account access.

(b) The voting system shall meet the following requirements for network security:

(i) All components of the voting system shall only be operated on a closed network only for the use of the voting system;

(ii) All components of the voting system shall include the limited use of non-routable IP address configurations for any device connected to the closed network. For the purposes of this requirement non-routable IP addresses are those defined in the RFC 1918 Address base; and

(iii) The voting system shall be tested to contain provisions for updating security patches, software and/or service packs without access to the open network.

(c) All voting systems submitted for certification after March 31, 2008, shall meet the following requirements for database security:

(i) All voting systems submitted for certification using Oracle 9i, Oracle 10g, or Microsoft SQL shall be hardened to the existing and published NSA guidelines for databases as follows:

a. Oracle 9i and Oracle 10g databases shall be hardened to the Center for Internet Security Benchmark for Oracle 9i/10g Ver. 2.0;

b. Microsoft SQL databases shall be hardened to the NSA Guide to the Secure Configuration and Administration of Microsoft SQL Server 2000.

(ii) All other voting system databases submitted for certification shall have the voting systems databases hardened to database manufacturer's existing hardening requirements; or

(iii) If the manufacturer has not established requirements for the specifically designed system, the voting systems submitted for certification shall have the voting systems databases hardened to the voting system providers' specifications.

(iv) All voting systems submitted for certification shall have all voting systems databases restricted to allowing access to database authentication from application only (or through application only);

(v) All data stored at rest in any voting system database shall be encrypted in accordance with section (vi) of this requirement; and

(vi) All Cryptography modules shall be documented by the voting system provider to be certified to US Federal Information Processing Standard (FIPS-140-2), and validated to FIPS 180 standards.

(d) The voting system shall meet the following requirements for operating system security:

(i) All voting systems being submitted for certification after March 31, 2008, shall have all operating systems hardened to NSA guidelines for operating systems as follows:

a. Apple Mac OS X systems shall be hardened to the NSA Apple Mac OS X v10.3.x "Panther" Security Configuration Guide Version 1.1;

b. Apple Server Operating Systems shall be hardened to the NSA Apple Mac OS X Server v10.3.x "Panther" Security Configuration Guide;

c. Microsoft Windows XP Operating systems shall be hardened to the NSA Windows XP Security Guide Version: 2.2 and the NSA Windows XP Security Guide Addendum Version 1.0;

d. Microsoft Windows 2000 operating systems shall be hardened to the following NSA Guides:

i. Guide to the Secure Configuration and Administration of Microsoft Internet Information Services 5.0 Version 1.4;

ii. Guide to the Secure Configuration and Administration of Microsoft ISA Server 2000 Version 1.5;

iii. Guide to Securing Microsoft Windows 2000 Active Directory Version 1.0;

iv. Guide to the Secure Configuration and Administration of Microsoft Windows 2000 Certificate Services Version 2.1.1;

v. Guide to Securing Microsoft Windows 2000 DHCP Version 1.3;

vi. Guide to Securing Microsoft DNS Version 1.0;

vii. Guide to Securing Microsoft Windows 2000 Encrypting File System Version 1.0;

viii. Guide to Securing Microsoft Windows 2000 File and Disk Resources Version 1.0.1;

ix. Guide to securing Microsoft Windows 2000 Group Policy Version 1.1;

x. Group Policy Reference Version 1.0.8;

xi. Guide to Securing Microsoft Windows 2000 Group Policy: Security Configuration Tool Set Version 1.2.1;

xii. Microsoft Windows 2000 IPSec Guide Version 1.0;

xiii. Guide to Windows 2000 Kerberos Settings Version 1.1;

xiv. Microsoft Windows 2000 Network Architecture Guide Version 1.0;

xv. Microsoft Windows 2000 Router Configuration Guide Version 1.02;

xvi. Guide to Securing Microsoft Windows 2000 Schema Version 1.0;

xvii. Guide to Securing Microsoft Windows 2000 Terminal Services Version 1.0; and

xviii. Guide to Securing Windows NT/9x Clients in a Windows 2000 Network Version 1.0.2;

e. Microsoft Windows Server 2003 operating systems shall be hardened to the NSA Microsoft Windows Server 2003 Security Guide Version 2.1 and The Microsoft Windows Server 2003 Security Guide Addendum Version 1.0;

f. Sun Solaris 8 operating systems shall be hardened to the NSA Guide to the Secure Configuration of Solaris 8 Version 1.0; and

g. Sun Solaris 9 operating systems shall be hardened to the NSA Guide to the Secure Configuration of Solaris 9 Version 1.0.

(ii) All other voting system operating systems submitted for certification after March 31, 2008, shall have all operating systems hardened to

existing manufacturer's hardening requirements; or

(iii) If the manufacturer has not established requirements for the specifically designed system, all voting systems being submitted for certification after March 31, 2007 shall have all operating systems hardened to the voting system providers' specifications;

(iv) The voting system provider shall provide documentation containing a list of minimum services and executables that are required to run the voting system application;

(v) The voting system provider shall configure the voting system operating system of the workstation and/or server used for the election management software to the following requirements:

a. The ability for the system to take an action upon inserting a removable media (Autorun) shall be disabled; and

b. The voting system shall only boot from the drive or device identified as the primary drive. The voting system shall not boot from any alternative device.

(vi) The voting system provider shall use a virus protection/prevention application on the election management server(s) /workstations which shall be capable of manual updates without the use of the internet.

(e) The voting system shall meet the following requirements for password security:

(i) All passwords shall be stored and used in a non-reversible format;

(ii) Passwords to database shall not be stored in database;

(iii) Password to database shall be owned and known only known by the application;

(iv) The application's database management system shall require separate passwords for the administrative account and each operator account with access to the application;

(v) The system shall be designed in such a way that the use of the administrative account password

shall not be required for normal operating functions at any remote location;

(vi) The system shall be designed in such a way to facilitate the changing of passwords for each election cycle;

(vii) The use of blank or empty passwords shall not be permitted at any time with the exception of a limited one-time use startup password which requires a new password to be assigned before the system can be used; and

(viii) All voting systems submitted for certification after March 31, 2008, shall have all components of voting system capable of supporting passwords of a minimum of 8 characters, which shall be capable of including numeric, alpha and special characters in upper case or lower case used in any combination.

(f) All voting system software submitted for certification after March 31, 2008, shall be in compliance with known software coding standards applicable to the base language of the application. The voting system shall meet the following minimum requirements for software security:

(i) Self-modifying, dynamically loaded or interpreted code is prohibited, except under the security provisions required by federal testing. External modification of code during execution shall be prohibited. Where the development environment (programming language and development tools) includes the following features, the software shall provide controls to prevent accidental or deliberate attempts to replace executable code:

a. Unbounded arrays or strings (includes buffers used to move data);

b. Pointer variables; and

c. Dynamic memory allocation and management.

(ii) All voting systems submitted for certification after March 31, 2008, shall have application software designed in a modular fashion. COTS software is not required to be inspected for compliance with this requirement. For the purpose of this requirement, “modules” may be compiled or interpreted independently. Modules may also be nested. The modularity rules described here apply to the component sub-modules of a library. The principle to be followed is that the module contains

all the elements to compile or interpret successfully and has limited access to data in other modules. The design concept is simple replacement with another module whose interfaces match the original module. All modules shall be designed in accordance with the following requirements for systems submitted for certification after March 31, 2008:

a. Each module shall have a specific function that can be tested and verified independently of the remainder of the code. In practice, some additional modules (such as library modules) may be needed to compile the module under test, but the modular construction allows the supporting modules to be replaced by special test versions that support test objectives.

b. Each module shall be uniquely and mnemonically named, using names that differ by more than a single character. In addition to the unique name, the modules shall include a set of header comments identifying the module's purpose, design, conditions, and version history, followed by the operational code. Headers are optional for modules of fewer than ten executable lines where the subject module is embedded in a larger module that has a header containing the header information. Library modules shall also have a header comment describing the purpose of the library and version information.

c. All required resources, such as data accessed by the module, should either be contained within the module or explicitly identified as input or output to the module. Within the constraints of the programming language, such resources shall be placed at the lowest level where shared access is needed. If that shared access level is across multiple modules, the definitions should be defined in a single file (called header files in some languages, such as C) where any changes can be applied once and the change automatically applies to all modules upon compilation or activation.

d. Each module shall have a single entry point, and a single exit point, for normal process flow. For library modules or languages such as the object-oriented languages, the entry point is to the individual contained module or method invoked. The single exit point is the

point where control is returned. At that point, the data that is expected as output shall be appropriately set. The exception for the exit point is where a problem is so severe that execution cannot be resumed. In this case, the design shall explicitly protect all recorded votes and audit log information and shall implement formal exception handlers provided by the language.

e. Process flow within the modules shall be restricted to combinations of the control structures defined below. This shall apply to any language feature where program control passes from one activity to the next, such as control scripts, object methods or sets of executable statements, even though the language itself is not procedural.

   i. In the constructs, any 'process' may be replaced by a simple statement, a subroutine or function call, or any of the control constructs.

   ii. Using the replacement rule to replace one or both of the processes in the Sequence construct with other Sequence constructs, a large block of sequential code may be formed. The entire chain is recognized as a Sequence construct and is sometimes called a BLOCK construct. Sequences shall be marked with special symbols or punctuation to delimit where it starts and where it ends.

   iii. A special case of the GENERAL LOOP is the FOR loop. The FOR loop may be programmed as a DO-WHILE loop. The FOR loop shall execute on a counter. The control FOR statement shall define a counter variable or variables, a test for ending the loop, and a standard method of changing the variable(s) on each pass such as incrementing or decrementing.

   iv. The use of the FOR loop shall avoid common errors such as a loop that never ends. The GENERAL LOOP shall not be used where one of the other loop structures will serve. However, if defined in the language, it may be useful in defining some loops where the exit needs to occur in the middle. Also, in other languages the GENERAL LOOP

logic may be used to simulate the other control constructs. The use of the GENERAL LOOP shall require the strict enforcement of coding conventions to avoid problems.

v. The voting system software code shall use uniform calling sequences. All parameters shall either be validated for type and range on entry into each unit or the unit comments shall explicitly identify the type and range for the reference of the programmer and tester. Validation may be performed implicitly by the compiler or explicitly by the programmer.

vi. The voting system software code shall have the return explicitly defined for callable units such as functions or procedures (do not drop through by default) for C-based languages and others to which this applies, and in the case of functions, shall have the return value explicitly assigned. Where the return is only expected to return a successful value, the C convention of returning zero shall be used. If an uncorrected error occurs so the unit shall return without correctly completing its objective, a non-zero return value shall be given even if there is no expectation of testing the return. An exception may be made where the return value of the function has a data range including zero.

vii. The voting system software code shall not use macros that contain returns or pass control beyond the next statement.

viii. For those languages with unbound arrays, the voting system software shall provide controls to prevent writing beyond the array, string, or buffer boundaries.

ix. For those languages with pointers or which provide for specifying absolute memory locations, the voting system software shall provide controls that prevent the pointer or address from being used to overwrite executable instructions or to access inappropriate areas where vote counts or audit records are stored.

x. For those languages supporting case statements, the voting system software shall have a default choice explicitly defined to catch values not included in the case list.

xi. The voting system software shall provide controls to prevent any vote counter from overflowing. An assumption that the counter size is large enough such that the value will never be reached does not meet this requirement.

xii. The voting system software code shall be indented consistently and clearly to indicate logical levels.

xiii. Excluding code generated by commercial code generators, the voting system software code is written in small and easily identifiable modules, with no more than 50% of all modules exceeding 60 lines in length, no more than 5% of all modules exceeding 120 lines in length, and no modules exceeding 240 lines in length. “Lines” in this context, are defined as executable statements or flow control statements with suitable formatting and comments.

xiv. Where code generators are used, the voting system software source file segments provided by the code generators shall be marked as such with comments defining the logic invoked and, a copy of the source code provided to the accredited test lab with the generated source code replaced with an unexpanded macro call or its equivalent.

xv. The voting system software shall have no line of code exceeding 80 columns in width (including comments and tab expansions) without justification.

xvi. The voting system software shall contain no more than one executable statement and no more than one flow control statement for each line of source code.

xvii. In languages where embedded executable statements are permitted in conditional expressions, the single embedded statement may be considered a part of the conditional

expression. Any additional executable statements should be split out to other lines.

xviii. The voting system software shall avoid mixed-mode operations. If mixed mode usage is necessary, then all uses shall be identified and clearly explained by comments.

xix. Upon exit() at any point, the voting system software shall present a message to the operator indicating the reason for the exit().

xx. The voting system software shall use separate and consistent formats to distinguish between normal status and error or exception messages. All messages shall be self-explanatory and shall not require the operator to perform any look-up to interpret them, except for error messages that require resolution by a trained technician.

xxi. The voting system software shall reference variables by fewer than five levels of indirection.

xxii. The voting system software shall have functions with fewer than six levels of indented scope, counted as follows:

```
int function()
{
        if (a = true)
1       {
                if ( b = true )
2               {
                        if ( c = true )
3                       {
                                if ( d =
true )
4                               {
```

```
        while(e > 0 )
5
        {

        code

        }
}
}
}
}
}
```

xxiii. The voting system software shall initialize every variable upon declaration where permitted.

xxiv. The voting system software shall have all constants other than 0 and 1 defined or enumerated, or shall have a comment which clearly explains what each constant means in the context of its use. Where “0” and “1” have multiple meanings in the code unit, even they shall be identified.

xxv. The voting system software shall only contain the minimum implementation of the “a = b ? c : d” syntax. Expansions such as “j=a?(b?c:d):e;” are prohibited.

xxvi. The voting system software shall have all assert() statements coded such that they are absent from a production compilation. Such coding may be implemented by ifdef()s that remove them from or include them in the compilation. If implemented, the initial program identification in setup should identify that assert() is enabled and active as a test version.

f. Control Constructs within the modules shall be limited to the acceptable constructs of Sequence, If-Then-Else, Do-While, Do-Until,

Case, and the General Loop (including the special case for loop).

i. If the programming language used does not provide these control constructs, the voting system provider shall provide comparable control structure logic. The constructs shall be used consistently throughout the code. No other constructs shall be used to control program logic and execution.

ii. While some programming languages do not create programs as linear processes, stepping from an initial condition through changes to a conclusion, the program components may nonetheless contain procedures (such as “methods” in object-oriented languages). In these programming languages, the procedures shall execute through these control constructs or their equivalents, as defined and provided by the voting system provider.

iii. Operator intervention or logic that evaluates received or stored data shall not redirect program control within a program routine. Program control may be redirected within a routine by calling subroutines, procedures, and functions, and by interrupt service routines and exception handlers (due to abnormal error conditions). Do-While (False) constructs and intentional exceptions (used as GoTos) are prohibited.

g. All modules of the voting system software shall use the following naming conventions:

i. Object, function, procedure, and variable names shall be chosen to enhance the readability and intelligibility of the program. Names shall be selected so that their parts of speech represent their use, such as nouns to represent objects and verbs to represent functions.

ii. Names used in code and in documentation shall be consistent.

iii. Names shall be unique within an application. Names shall differ by more than a single character. All single-character names are forbidden except

those for variables used as loop indexes. In large systems where subsystems tend to be developed independently, duplicate names may be used where the scope of the name is unique within the application. Names shall always be unique where modules are shared.

iv. Language keywords shall not be used as names of objects, functions, procedures, variables, or in any manner not consistent with the design of the language.

h. All modules of the voting system software shall adhere to basic coding conventions. The voting system providers shall identify the published, reviewed, and industry-accepted coding conventions used.

i. All modules of the voting system software shall use the following comment conventions:

i. All modules shall contain headers. For small modules of 10 lines or less, the header may be limited to identification of unit and revision information. Other header information should be included in the small unit headers if not clear from the actual lines of code. Header comments shall provide the following information:

1. The purpose of the unit and how it works;

2. Other units called and the calling sequence;

3. A description of input parameters and outputs;

4. File references by name and method of access (i.e., read, write, modify or append);

5. Global variables used; and

6. Date of creation and a revision record.

ii. Descriptive comments shall be provided to identify objects and data types. All

variables shall have comments at the point of declaration clearly explaining their use. Where multiple variables that share the same meaning are required, the variables may share the same comment.

iii. In-line comments shall be provided to facilitate interpretation of functional operations, tests, and branching.

iv. Assembly code shall contain descriptive and informative comments such that its executable lines can be clearly understood.

v. All comments shall be formatted in a uniform manner that makes it easy to distinguish them from executable code.

j. All modules of the system shall meet the following requirements for installation of software, including hardware with embedded firmware.

i. If software is resident in the system as firmware, the voting system provider shall require and state in the system documentation that every device is to be retested to validate each ROM prior to the start of elections operations.

ii. To prevent alteration of executable code, no software shall be permanently installed or resident in the voting system unless the system documentation states that the jurisdiction shall provide a secure physical and procedural environment for the storage, handling, preparation, and transportation of the system hardware.

iii. The voting system bootstrap, monitor, and device-controller software may be resident permanently as firmware, provided that this firmware has been shown to be inaccessible to activation or control by any means other than by the authorized initiation and execution of the vote counting program, and its associated exception handlers.

iv. The election-specific programming may be installed and resident as firmware, provided that such firmware is installed on a component (such as a computer

chip) other than the component on which the operating system resides.

v. After initiation of election day testing, no source code or compilers or assemblers shall be resident or accessible.

vi. Independent analysis will test for the following conditions and report on absence or presence of the following input validations in accordance with section 45.5.2.4.3:

1. Path manipulation;

2. Cross Site Scripting.Basic X;

3. Resource Injection;

4. OS Command Injection (also called "Shell Injection"); and

5. SQL Injection.

vii. Independent analysis will test for the following conditions and report on absence or presence of the following range errors in accordance with section 45.5.2.4.3:

1. Stack Overflow;

2. Heap Overflow;

3. Format string vulnerability; and

4. Improper Null Termination.

viii. Independent analysis will test for following conditions and report on absence or presence of the following API abuses in accordance with section 45.5.2.4.3:

1. Heap Inspection; and

2. String Management/ Manipulation.

ix. Independent analysis will test for following conditions and report on absence or presence of the following Time and State conditions in accordance with section 45.5.2.4.3:

1. Time-of-check/Time-of-use race condition; and

2. Unchecked Error Condition.

x. Independent analysis will test for following conditions and report on absence or presence of the following code quality conditions accordance with section 45.5.2.4.3:

1. Memory Leaks;

2. Unrestricted Critical Resource Lock;

3. Double Free;

4 Use After Free;

5. Uninitialized variable;

6. Unintentional pointer scaling;

7. Improper pointer subtraction; and

8. Null Dereference.

xi. Independent analysis will test for following conditions and report on absence or presence of the following encapsulation conditions in accordance with section 45.5.2.4.3:

1. Private Array-Typed Field Returned from a Public Method;

2. Public Data Assigned to Private Array-Typed Field;

3. Overflow of static internal buffer; and

4. Leftover Debug Code.

xii. The Application shall not open database tables for direct editing.

k. All voting systems submitted for certification after March 31, 2008, shall meet the following minimum requirements for removable storage media with data controls:

i. All voting data stored which includes vote records, ballot images, tally data and cast votes shall be authenticated

and validated in accordance with cryptography requirements of subsection (c)(vii) of this requirement;

ii. All non-voting data stored shall be authenticated, encrypted, and validated in accordance with cryptography requirements of subsection (c)(vii) of this requirement; and

iii. Antivirus software shall be present and scan removable media upon insertion of media or media device on server and/or workstations hosting the elections management software.

45.5.2.6.2 The voting system provider shall provide documentation detailing voting system security in the areas listed below. The system shall contain documented configurations, properties and procedures to prevent, detect and log changes to system capabilities for:

(a) Defining ballot formats;

(b) Casting and recording votes;

(c) Calculating vote totals consistent with defined ballot formats;

(d) Reporting vote totals;

(e) Altering of voting system audit records;

(f) Changing, or preventing the recording of, a vote;

(g) Introducing data for a vote not cast by a registered voter;

(h) Changing calculated vote totals;

(i) Preventing access to vote data, including individual votes and vote totals, to unauthorized individuals; and

(j) Preventing access to voter identification data and data for votes cast by the voter such that an individual can determine the content of specific votes cast by the voter.

45.5.2.6.3 The voting system provider shall submit to the Secretary of State its recommended policies or guidelines governing:

(a) Software access controls;

(b) Hardware access controls;

(c) Data communications;

(d) Effective password management;

(e) Protection abilities of a particular operating system;

(f) General characteristics of supervisory access privileges;

(g) Segregation of duties; and

(h) Any additional relevant characteristics.

45.5.2.6.4 The voting system shall include detailed documentation as to the security measures it has in place for all systems, applicable software, devices that act as connectors (upload, download, and other programming devices), and any security measures the voting system provider recommends to the jurisdictions that purchase the voting system.

45.5.2.7 Telecommunications Requirements

45.5.2.7.1 Telecommunications includes all components of the system that transmit data outside of the closed network as defined in this Rule.

45.5.2.7.2 All electronic transmissions from a voting system shall meet the following minimum standards:

(a) Modems from remote devices shall be “dial only” and cannot be programmed to receive a call;

(b) All communications of data in transfer shall be encrypted, authenticated and verified to the FIPS 140-2 standard and verified to the FIPS 180 standard; and

45.5.2.7.3 Any modem in any component failing to meet these criteria shall not be used by any voting system.

45.5.2.7.4 All wireless components on voting systems shall be disabled with the exception of line of sight infrared technology used in a closed environment where the transmission and reception is shielded from external infrared signals and can only accept infrared signals generated from within the system.

45.5.2.7.5 All systems that transmit data over public telecommunications networks shall maintain a clear audit trail that can be provided to the Secretary of State when election results are transmitted by telephone, microwave or any other type of electronic communication.

45.5.2.7.6 Systems designed for transmission of voter information (i.e. electronic pollbooks) over public networks shall meet security standards that address the security risks attendant with the casting of ballots at remote sites controlled by election officials using the voting system configured and installed by election officials and/or their voting system provider or contractor, and using in-person authentication of individual voters.

45.5.2.7.7 Any voting system provider of systems that cast individual ballots over a public telecommunications network shall provide detailed descriptions of:

(a) All activities mandatory to ensuring effective system security to be performed in setting up the system for operation, including testing of security before an election.

(b) All activities that should be prohibited during system setup and during the time frame for voting operations, including both the hours when polls are open and when polls are closed.

45.5.2.7.8 In any situation in which the voting system provider's system transmits data through any telecommunications medium, the system shall be able to recover, either automatically or with manual intervention, from incomplete or failed transmission sessions and resume transmissions automatically when telecommunications are re-established.

(a) Recovery of transmissions shall include notations of the interrupted transmission session and the resumed transmission session in the system and application transaction logs.

(b) Failure and recovery of transmissions shall not cause any error in data transmitted from the polling place to the central election site during a recovered transmission session.

45.5.2.7.9 Voting systems that use public telecommunications networks shall provide system documentation that clearly identifies all COTS hardware and software products and communications services used in the development and/or operation of the voting system, including operating systems, communications routers, modem drivers and dial-up networking software. Documentation shall identify the name, voting system provider, and version used for each such component.

45.5.2.7.10 Voting systems providers shall document how they plan to monitor and respond to known threats to which their voting systems are vulnerable. This documentation shall provide a detailed description, including scheduling information, of the procedures the voting system provider will use to:

(a) Monitor threats, such as through the review of assessments, advisories, and alerts for COTS components;

(b) Evaluate the threats and, if any, proposed responses.

(c) Develop responsive updates to the system and/or corrective procedures; and

(d) As part of certification requirements of the proposed system, provide assistance to customers, either directly or through detailed written procedures, how to update their systems and/or to implement the corrective procedures within the timeframe established by the Secretary of State.

45.5.2.8 Accessibility Requirements

45.5.2.8.1 Specific minimum accessibility requirements include those specified in section 1-5-704 C.R.S., Secretary of State Rule 34, Rule 35 and the following:

(a) Buttons and controls shall be distinguishable by both shape and color;

(b) Audio ballots shall meet the following standards:

(i) The voting system shall allow the voter to pause and resume the audio presentation.

(ii) The audio system shall allow voters to control within reasonable limits, the rate of speech.

(c) No voting system or any of its accessible components shall require voter speech for its operation;

(d) All Touchscreen technology shall be tested for use of fingers as well as non-human touch that is both wet and dry;

(e) Voting systems shall include at least the ability to activate and navigate by means of push buttons, dials, wheels, keypads, and/or touch screens. All voting systems submitted for certification after March 31, 2008, shall also include any form of either switches, sip and puff devices, or additional blink control devices; and

(f) Adjustability of color settings, screen contrasts and/or screen angles/tilt may be made by either the poll worker or voter if the system uses a display screen. A minimum of two color settings, two contrast settings and two angles shall be available for all display screens.

45.5.2.8.2 Documentation of the accessibility of the voting system shall include the following items at a minimum:

(a) If appropriate, voting booth design features that provide for privacy for the voter while voting (if a voting booth is not included with the system, then describe how voter privacy is accomplished);

(b) Adaptability of the proposed system for voters with disabilities as outlined in the Americans with Disabilities Act guidelines;

(c) Technology used by the voting system that prevents headset/headphone interference with hearing aids;

(d) Types and size of voice file(s) the voting system uses;

(e) Method for recording, sharing and storing voice files in the voting system;

(f) How paginating through viewable screens is accomplished if it is required with the voting system;

(g) Various methods of voting to ensure access by persons with multiple disabilities;

(h) Capabilities of the voting system to accurately accept a non-human touch as input on the touch screen; and

(i) Method for adjusting color settings, screen contrasts, and screen angles/tilt if the system uses a display screen.

45.5.2.9 Voter-Verifiable Paper Record Requirements (V-VPAT)

45.5.2.9.1 V-VPAT shall refer to a Voter-verified paper record as defined in section1-1-104(50.6)(a), C.R.S.

45.5.2.9.2 Existing systems that are retrofitted to comply with this law shall be examined for certification by the Secretary of State. Any retrofitted voting system shall comply with the process and application for certification as identified by this rule.

45.5.2.9.3 The V-VPAT shall consist of the following minimum components:

(a) The voting device shall contain a paper audit trail writer or printer that shall be attached, built into, or used in conjunction with the DRE. The printer shall duplicate a voter's selections from the DRE onto a paper record;

(b) The unit or device shall have a paper record display unit or area that shall allow a voter to view his or her paper record;

(c) The V-VPAT unit shall contain a paper record storage unit that shall store cast and spoiled paper record copies securely; and

(d) These devices may be integrated as appropriate to their operation.

45.5.2.9.4 V-VPAT devices shall allow voters to verify his or her selections on a paper record prior to casting ballots. The voter shall either accept or reject the choices represented on the paper record. Both the electronic record and the paper record shall be stored and retained upon the completion of casting a ballot.

45.5.2.9.5 The V-VPAT printer connection may be any standard, publicly documented printer port (or the equivalent) using a standard communication protocol.

45.5.2.9.6 The printer shall not be permitted to communicate with any other device than the voting device to which it is connected.

45.5.2.9.7 The printer shall only be able to function as a printer, and not perform any other non-printer related services.

45.5.2.9.8 Every electronic voting record shall have a corresponding paper record.

45.5.2.9.9 The paper record shall be considered an official record of the election available for recounts, and shall be sturdy, clean, and of sufficient durability to be used for this purpose.

45.5.2.9.10 The V-VPAT device shall be designed to allow every voter to review, and accept or reject his/her paper record in as private and independent manner as possible for both disabled and non-disabled voters.

45.5.2.9.11 The V-VPAT system shall be designed in conjunction with State Law to ensure the secrecy of votes so that it is not possible to determine which voter cast which paper record.

45.5.2.9.12 The V-VPAT printer shall print at a font size no less than ten (10) points for ease of readability. Any protective covering intended to be transparent shall be in such condition that it can be made transparent by ordinary cleaning of its exposed surface.

45.5.2.9.13 The V-VPAT system shall be designed to allow each voter to verify his or her vote on a paper record in the same language they voted in on the DRE.

45.5.2.9.14 The V-VPAT system shall be designed to prevent tampering with unique keys and/or seals for the compartment that stores the paper record, as well as meet the security requirements of this rule. Additional security measures may be in place on the printer to prevent tampering with the device.

45.5.2.9.15 The V-VPAT system shall be capable of printing and storing paper record copies for at least seventy-five (75) ballots cast without requiring the paper supply source, ink or toner supply, or any other similar consumable supply to be changed, assuming a fully printed double sided eighteen (18) inch ballot with a minimum of 20 contests.

45.5.2.9.16 The V-VPAT unit shall provide a “low supply” warning to the election judge to add paper, ink, toner, ribbon or other like supplies. In the event that an election judge is required to change supplies during the process of voting, the voter shall be allowed to reprint and review the paper audit trail without having to re-mark his or her ballot, and the device shall prevent the election judge from seeing any voters’ ballots.

45.5.2.9.17 All voting systems submitted for certification after March 31, 2008, shall stop the V-VPAT printer of all forward operations of the DRE if the printer is not working due to paper jams, out of supply of consumables, or other issue which may cause the correct readable printing of information on the V-VPAT record as designed.

45.5.2.9.18 The voting system provider shall provide procedures and documentation for the use of the V-VPAT device.

45.5.2.9.19 The printed information on the printed ballot or verification portion of the V-VPAT device shall contain at least the following items:

(a) Name or header information of race, question or issue;

(b) Voter's selections for the race information;

(c) Write-in candidate's names if selected;

(d) Undervote or overvote information – this is in addition to the information on the review screen of the DRE;

(e) Ability to optionally produce a unique serial number (randomized to protect privacy); and

(f) Identification that the ballot was cancelled or cast.

45.5.2.9.20 The V-VPAT shall allow a voter to spoil his or her paper record no more than two (2) times. Upon spoiling, the voter shall be able to modify and verify selections on the DRE without having to reselect all of his or her choices.

45.5.2.9.21 Before the voter causes a third and final record to be printed, the voter shall be presented with a warning notice that the selections made on screen shall be final and the voter shall see and verify a printout of his or her vote, but shall not be given additional opportunities to change their vote.

45.5.2.9.22 All V-VPAT components shall be capable of integrating into existing state testing and auditing requirements of the voting system.

45.5.2.9.23 The V-VPAT component should print a barcode with each record that contains the human readable contents of the paper record and digital signature information. The voting system provider shall include documentation of the barcode type, protocol, and/or description of barcode and the method of reading the barcode as applicable to the voting system.

45.5.2.9.24 The V-VPAT component shall be designed such that a voter shall not be able to leave the voting area with the paper record.

45.5.2.9.25 If used for provisional ballots, the V-VPAT system shall be able to mark paper records as a provisional ballot through the use of

human readable text and optionally printing barcode and/or serial number information which shall provide for mapping the record back to both the electronic record and the provisional voter for processing after verification in accordance with Article 8.5 of Title 1 C.R.S.

45.5.2.9.26 The Secretary of State shall keep on file procedures submitted by the voting system provider for how to investigate and resolve malfunctions including, but not limited to: misreporting votes, unreadable paper records, paper jams, low-ink, misfeeds, preventing the V-VPAT from being a single point of failure, recovering votes in the case of malfunction and power failures.

45.6 Testing

45.6.1 Voting System Provider Demonstration

45.6.1.1 The voting system provider shall demonstrate the exact proposed voting system to the Secretary of State or his or her designee prior to any functional testing. It should be expected that a minimum of 6 hours would be required of the voting system provider to demonstrate and assist with programming of the software as necessary.

45.6.1.2 The demonstration period does not have a pre-determined agenda for the voting system provider to follow; however, presentations should be prepared to address and demonstrate with the specific system the following items as they pertain to each area and use within the voting system:

(a) System overview;

(b) Verification of complete system matching EAC certification;

(c) Ballot definition creation;

(d) Printing ballots on demand;

(e) Hardware diagnostics testing;

(f) Programming election media devices for various count methods:

(i) Mail-in Ballots;

(ii) Early Voting;

(iii) Precinct/Poll Place;

(iv) Provisional; and

(v) Vote Center.

(g) Sealing and securing system devices;

(h) Logic and accuracy testing;

(i) Processing ballots;

(j) Accessible use;

(k) Accumulating results;

(l) Post-election audit;

(m) Canvass process handling;

(n) Audit steps and procedures throughout all processes;

(o) Certification of results; and

(p) Troubleshooting.

45.6.1.3 The voting system provider shall have access to the demonstration room for one hour prior to the start of the demonstration to provide time for setup of the voting system.

45.6.1.4 A maximum of 3 business days – 24 hours total shall be allowed for the demonstration.

45.6.1.5 The demonstration shall be open to representatives of the press and the public to the extent allowable. The Secretary of State may limit the number of representatives from each group to accommodate space limitations and other considerations.

45.6.1.6 The Secretary of State shall post notice of the fact that the demonstration will take place in the designated public place for posting notices for at least seven (7) days before the demonstration. The notice shall indicate the general time frame during which the demonstration may take place and the manner in which members of the public may obtain specific information about the time and place of the test.

45.6.1.7 The voting system provider shall provide the same class of workstation and/or server for testing the voting system as the normal production environment for the State of Colorado.

45.6.2 Functional Testing

45.6.2.1 Voting system provider requirements for testing

45.6.2.1.1 The voting system provider shall submit for testing the specific system configuration that shall be offered to jurisdictions including the components with which the voting system provider recommends that the system be used.

45.6.2.1.2 The voting system provider is not required to be present for the functional testing, but shall provide a point of contact for support.

45.6.2.1.3 The proprietary software shall be installed on the workstation/server and all applicable voting system components by the testing board following the verification of the trusted build, and using the procedures provided by the voting system provider. After installation, the software and firmware shall be verified to the trusted build hash values.

45.6.2.1.4 The test shall be performed with test ballots and an election setup file, as determined by the Secretary of State.

45.6.2.1.5 Functional testing shall be completed according to the schedule identified in section 45.3.3.

45.6.2.2 Secretary of State requirements for testing

45.6.2.2.1 The Secretary of State or the designee shall conduct functional testing on the voting system based on this rule and additional testing procedures as determined by the Secretary of State.

45.6.2.2.2 The voting system shall receive a pass/fail or not applicable for each test conducted with applicable notation on the test log.

45.6.2.2.3 A test log of the testing procedure shall be maintained and recorded on file with the Secretary of State. This test log shall identify the system and all components by voting system provider name, make, model, serial number, software version, firmware version, date tested, test number, test description, notes of test, applicable test scripts, and results of test. All test environment conditions shall be noted.

45.6.2.2.4 All operating steps, the identity and quantity of simulated ballots, annotations of output reports, any applicable error messages and observations of performance shall be recorded.

45.6.2.2.5 In the event that a deviation to requirements pertaining to the test environment, voting system arrangement and method of operation, the specified test procedure, or the provision of test instrumentation and facilities is required, this deviation shall be recorded in the test log together with a discussion of the reason for the deviation and a statement of the effect of the deviation on the validity of the test procedure.

45.6.2.3 General Testing Procedures and Instructions

45.6.2.3.1 Certification tests shall be used to determine compliance with applicable performance standards for the system and its components. The general procedure for these tests shall:

(a) Verify, by means of applicant's standard operating procedure, that the device is in a normal condition and status;

(b) Establish the standard test environment or the special environment required to perform the test;

(c) Invoke all operating modes or conditions necessary to initiate or to establish the performance characteristic to be tested;

(d) Measure and record the value or the range of values of the performance characteristic to be tested; and

(e) Verify all required measurements have been obtained, and that the device is still in a normal condition and status.

45.6.2.3.2 All tests shall be conducted as described in this section 45.6.2.3 in regular election mode. At no point shall testing be conducted in any form of test mode.

45.6.2.3.3 Each voting system shall be tested and examined by conducting at least three mock elections which shall include voting scenarios that exist within a primary, a coordinated election, and a recall election.

45.6.2.3.4 Each component of the voting system shall contain provisions for verifying it is functioning correctly and, whether operation of the component is dependent upon instructions specific to that election. Test scripts shall be substantive and qualitative in form with expected results listed for each test.

45.6.2.3.5 Election scenarios shall feature at least 10 districts (or district types), comprised of at least 20 precincts that will result in a minimum of 5 unique ballot styles or combinations as indicated in the instructions to providers.

45.6.2.3.6 The voting system provider is required to produce ballots in quantities identified below for each of the elections. Enough ballots need to be created to conduct the testing of the voting system as defined in this rule. One complete set of ballots will be tested in each of the applicable counter types (or groups) indicated below:

(a) Poll Place or Vote Center - ballots are flat – no score marks;

(b) Early Voting – ballots are flat – no score marks;

(c) Mail-in – ballots are scored and folded to fit in standard Colorado Mail-in Ballot Envelopes; and

(d) Provisional – ballots are flat- no score marks.

45.6.2.3.7 All ballots provided shall be blank with no marks on them. The following combinations of ballots are required:

(a) Four separate decks of ballots shall be provided consisting of 25 ballots for each precinct/precinct split generated for each election that are flat (1500 minimum combined). At least one deck shall have the General Election data, and at least one shall have the Primary election data as indicated in the instructions for voting system providers;

(b) Four separate decks of ballots shall be provided consisting of 25 ballots for each precinct/precinct split generated for each election that are folded (1500 minimum combined). At least one deck shall have the General Election data,

and at least one shall have the Primary election data as indicated in the instructions for voting system providers;

(c) Four separate decks of ballots consisting of 300 ballots of any single precinct from each election. Two of these decks shall be printed in all alternative languages as required for the State of Colorado pursuant to section 45.5.2.3.5;

(d) One separate deck of ballots consisting of 200 ballots of any single precinct from the Coordinated election shall be provided that contains a two page ballot (races on four faces);

(e) One separate deck of ballots consisting of 10 ballots for each precinct generated for the Recall election that are flat as indicated in the instructions for voting system providers; and

(f) Any voting system provider that uses serial numbers printed on ballots for processing shall produce ballots of each requirement above printed both with and without serial numbers.

45.6.2.3.8 The voting system provider shall provide 10 ballot marking pens/pencils/markers as defined by their system for marking ballots by the Secretary of State or the designee.

45.6.2.3.9 The testing board shall mark a minimum of 300 ballots with marking devices of various color, weight, and consistency to determine accurate counting with a variety of marking devices.

45.6.2.3.10 Ballots shall be cast and counted in all applicable counter types (or counter groups) as necessary based on the parts included in the voting system. These are at a minimum: Poll Place (or Vote Center), Mail-in, Provisional, and Early Voting. Ballots may be run through components 10 or more times depending on components and counter group being tested to achieve a minimum number of ballots cast as follows for each group:

(a)	Polling Place / OS	=	1,500;
(b)	Polling Place / DRE	=	500;
(c)	Vote Center/ OS	=	5,000;
(d)	Vote Center / DRE	=	500
(e)	Early Voting / OS	=	5,000;
(f)	Early Voting / DRE	=	250;
(g)	Mail-in	=	10,000; and
(h)	Provisional	=	5,000.

45.6.2.3.11 Ballot design shall cover the scope of allowable designs for the given system. For example, if a system is capable of producing 11" and 18" ballots, then both ballot styles shall be tested in each of the elections above. If more sizes are available, they shall also be tested. Ballots shall be designed and presented with a maximum of four (4) columns and a minimum of one (1) column.

45.6.2.3.12 Ballots shall be printed in applicable languages as required by State and/or federal law.

45.6.2.3.13 Ballots shall include candidates to represent the maximum number of political parties in the State of Colorado, and shall accommodate all qualified political parties and political organizations.

45.6.2.3.14 Ballots shall include the following minimum race situations to simulate and test "real world" situations in the State of Colorado:

(a) Parties for different races;

(b) Selection of a pair of candidates (i.e. president and vice president);

(c) In a Primary Election, allow a voter to vote for the candidate of the party of his or her choice and for any and all non-partisan candidates and measures, while preventing the voter from voting for a candidate of another party;

(d) In a general election, allow a voter to vote for any candidate for any office, in the number of positions allowed for the office, and to select any measure on the ballot that the voter is allowed to vote in, regardless of party;

(e) Allow for programming to accommodate Colorado recall questions as prescribed in Article 12 of Title 1, C.R.S.;

(f) A minimum of 20 pairs of "yes" and "no" positions for voting on ballot issues; and

(g) Ability to contain a ballot question or issue of at least 200 words.

45.6.2.3.15 Additional tests and procedures may be requested at the discretion of the Secretary of State.

45.6.3 Certification

45.6.3.1 The Secretary of State shall certify voting systems that substantially comply with the requirements in this rule, Colorado Election Code, and any additional testing that is deemed necessary by the Secretary of State.

45.6.3.2 If any malfunction or data error is detected, its occurrence and the duration of operating time preceding it shall be recorded for inclusion in the analysis and the test shall be interrupted. If corrective action is taken to restore the devices

to a fully operational condition within 8 hours, then the test may be resumed at the point of suspension.

45.7 Temporary Use

45.7.1 If a voting system provider has a system that has been approved by an VSTL, but has not yet been approved for certification through the Secretary of State, the voting system provider or the designated election official may apply to the Secretary of State for temporary approval of the system to be used for up to one year.

45.7.2 Upon approval of temporary use, a jurisdiction may use the voting system, or enter into a contract to rent or lease the voting system for a specific election upon receiving written notice from the Secretary of State's office. At no time shall a jurisdiction enter into a contract to purchase a voting system that's been approved for temporary use.

45.7.3 The Secretary of State shall approve use of a temporarily approved voting system for each election that a jurisdiction would like to conduct with the voting system.

45.7.4 Temporary use does not supersede the certification requirements and/or process, and may be revoked at any time at the discretion of the Secretary of State.

45.8 Periodic Review

45.8.1 The Secretary of State shall periodically review the voting systems in use in Colorado to determine if the system(s):

(a) Are defective, obsolete, or unacceptable for use based on the requirements of this rule; and

(b) Have been modified from certified and trusted build versions of hardware or software;

45.8.2 The Secretary of State shall review a minimum of two randomly selected jurisdictions and voting systems per calendar year at the choosing of the Secretary of State.

45.8.3 The Secretary of State shall conduct an annual visual inspection of all software incident records maintained by each voting system provider certified for use in the State of Colorado.

45.8.4 After such review, certification or temporary approval for use may be withdrawn. Three (3) months notice shall be given prior to withdrawing certification of any voting system unless the Secretary of State shows good cause for a shorter notice period.

45.8.5 All forms, notes and documentation from a periodic review shall be kept on file with the Secretary of State.

45.9 Decertification

45.9.1 If after any time the Secretary of State has certified a voting system, it is determined that the voting system fails to substantially meet the standards set forth in this rule, the Secretary of State shall notify any jurisdictions in the State of Colorado and the voting system provider of that particular voting system that the certification of that system for future use and sale in Colorado is to be withdrawn.

45.9.2 Certification of a voting system may be revoked and/or suspended at the discretion of the Secretary of State based on information that may be provided after the completion of the

initial certification. This information may come from any of the following sources:

(a) The Election Assistance Commission (EAC);

(b) Voting Systems Testing Laboratories (VSTL);

(c) The Federal Election Commission (FEC);

(d) The National Software Reference Library (NSRL);

(e) National Association of State Election Directors (NASED);

(f) The National Association of Secretaries of State (NASS);

(g) Information from any state elections department or Secretary of State; and/or

(h) Information from Colorado County Clerk and Recorders or their association.

45.9.3 Any use of a decertified or uncertified voting system for any jurisdiction in the State of Colorado shall result in possible loss of future and other existing certifications within the State, at the discretion of the Secretary of State.

45.9.4 Pursuant to section 1-5-621, C.R.S., the Secretary of State shall hold a public hearing to consider the decision to decertify a voting system.

45.10 Modifications and Re-examination

45.10.1 Any field modification, change, or other alteration to a voting system shall require approval or certification before it may be used in any election within the State of Colorado.

45.10.2 A voting system provider may apply to the Secretary of State for the review of a modification of an existing certified system at any time during the year. Secretary of State shall conduct sufficient testing to ensure that all incremental changes to any voting system being submitted for certification meet all security requirements set forth in this rule.

45.11 Acceptance Testing by Jurisdictions

45.11.1 Whenever an election jurisdiction acquires a new system or modification of an existing system certified by the Secretary of State, the election jurisdiction shall perform acceptance tests of the system before it may be used to cast or count votes at any election. The voting system shall be operating correctly, pass all tests as directed by the acquiring jurisdiction's project manager or contract negotiator, and shall be identical to the voting system certified by the Secretary of State.

45.11.2 The voting system provider shall provide all manuals and training necessary for the proper operation of the system to the jurisdiction, or as indicated by their contract.

45.11.3 The election jurisdiction shall perform a series of functional and programming tests that shall test all functions of the voting system at their discretion.

45.11.4 The jurisdiction shall coordinate acceptance testing with the Secretary of State's designated agent and complete a Jurisdiction Acceptance Test form provided by the Secretary of State.

45.12 Purchases and Contracts

45.12.1 Any voting system that has been certified under the procedures of this Rule are eligible for purchase, lease, or rent for use by jurisdictions within the State of Colorado providing the contract contains the following items:

(a) The voting system is certified for use within the State;

(b) Contract contains training and maintenance costs for Jurisdiction; and

(c) Contract identifies components contained in the certified voting system, and appears complete with all accessories necessary for successfully conducting an election within the laws and rules of the State of Colorado.

45.12.2 The SOS shall maintain on file a list of all components used and purchased for use. The list shall include at a minimum, the name of the jurisdiction, the date of purchase, the serial number(s) of voting devices and voting systems that was purchased.

Rule 46. Rules Concerning Vacancies in Nomination – Repealed

Rule 47. Rules Concerning Fleeing Voters

47.1 A fleeing voter is any voter who leaves the voting area without completing the voting process through the final step of casting his or her ballot.

47.2 If a voter leaves the voting area without completing the voting process, two judges of different affiliation shall to the extent possible, cover the voter's choices, and cast the ballot as the voter left it.